Principles of Electrical Machines

V.K. MEHTA
ROHIT MEHTA

S. CHAND

Principles of
ELECTRICAL MACHINES

[FOR DEGREE, A.M.I.E., DIPLOMA AND OTHER ENGINEERING EXAMINATIONS]

Created with Print2PDF. To remove this line, buy a license at: http://www.software602.com/

S. CHAND & COMPANY LTD.

(An ISO 9001 : 2000 Company)

Head Office : 7361, RAM NAGAR, NEW DELHI - 110 055
Phones : 23672080-81-82, 9899107446, 9911310888;
Fax : 91-11-23677446
Shop at: **schandgroup.com;** E-mail: **schand@vsnl.com**

Branches :

- 1st Floor, Heritage, Near Gujarat Vidhyapeeth, Ashram Road, **Ahmedabad**-380 014. Ph. 27541965, 27542369, ahmedabad@schandgroup.com
- No. 6, Ahuja Chambers, 1st Cross, Kumara Krupa Road, **Bangalore**-560 001. Ph : 22268048, 22354008, bangalore@schandgroup.com
- 238-A M.P. Nagar, Zone 1, **Bhopal** - 462 011. Ph : 4274723. bhopal@schandgroup.com
- 152, Anna Salai, **Chennai**-600 002. Ph : 28460026, chennai@schandgroup.com
- S.C.O. 2419-20, First Floor, Sector- 22-C (Near Aroma Hotel), **Chandigarh**-160022, Ph-2725443, 2725446, chandigarh@schandgroup.com
- 1st Floor, Bhartia Tower, Badambadi, **Cuttack**-753 009, Ph-2332580; 2332581, cuttack@schandgroup.com
- 1st Floor, 52-A, Rajpur Road, **Dehradun**-248 001. Ph : 2740889, 2740861, dehradun@schandgroup.com
- Pan Bazar, **Guwahati**-781 001. Ph : 2738811, guwahati@schandgroup.com
- Sultan Bazar, **Hyderabad**-500 195. Ph : 24651135, 24744815, hyderabad@schandgroup.com
- Mai Hiran Gate, **Jalandhar** - 144008 . Ph. 2401630, 5000630, jalandhar@schandgroup.com
- A-14 Janta Store Shopping Complex, University Marg, Bapu Nagar, **Jaipur** - 302 015, **Phone : 2719126**, jaipur@schandgroup.com
- 613-7, M.G. Road, Ernakulam, **Kochi**-682 035. Ph : 2378207, cochin@schandgroup.com
- 285/J, Bipin Bihari Ganguli Street, **Kolkata**-700 012. Ph : 22367459, 22373914, kolkata@schandgroup.com
- Mahabeer Market, 25 Gwynne Road, Aminabad, **Lucknow**-226 018. Ph : 2626801, 2284815, lucknow@schandgroup.com
- Blackie House, 103/5, Walchand Hirachand Marg , Opp. G.P.O., **Mumbai**-400 001. Ph : 22690881, 22610885, mumbai@schandgroup.com
- Karnal Bag, Model Mill Chowk, Umrer Road, **Nagpur**-440 032 Ph : 2723901, 2777666 nagpur@schandgroup.com
- 104, Citicentre Ashok, Govind Mitra Road, **Patna**-800 004. Ph : 2300489, 2302100, patna@schandgroup.com
- 291/1, Ganesh Gayatri Complex, 1st Floor, Somwarpeth, Near Jain Mandir, **Pune**-411011. Ph : 64017298, pune@schandgroup.com
- Flat No. 104, Sri Draupadi Smriti Apartment, East of Jaipal Singh Stadium, Neel Ratan Street, Upper Bazar, **Ranchi**-834001. Ph: 2208761, ranchi@schandgroup.com
- Kailash Residency, Plot No. 4B, Bottle House Road, Shankar Nagar, **Raipur.** Ph. 09981200834 raipur@schandgroup.com

© 2002, V.K. Mehta, Rohit Mehta

All rights reserved. No part of this publication may be reproduced, stored in a retrieval system or transmitted, in any form or by any means, electronic, mechanical, photocopying, recording or otherwise, without the prior permission of the Publishers.

First Edition 2002
Reprints 2005, 2006 (Twice), 2007 (Twice)
Reprint 2008
Second Edition 2009

ISBN:81-219-2191-0
Code : 10A 243

PRINTED IN INDIA
By Rajendra Ravindra Printers (Pvt.) Ltd., 7361, Ram Nagar, New Delhi-110 055
and published by S. Chand & Company Ltd., 7361, Ram Nagar, New Delhi-110 055.

Created with Print2PDF. To remove this line, buy a license at: http://www.software602.com/

PREFACE TO THE SECOND EDITION

The general response to the first edition of the book was very encouraging. Authors feel that their work has been amply rewarded and wish to express their deep sense of gratitude, in common to the large number of readers who have used it, and in particular to those of them who have sent helpful suggestions from time to time for the improvement of the book.

In the present revised edition, we have made sincere efforts to make the book up-to-date. This edition has three notable features. First, three new chapters viz. ***Electromechanical Energy Conversion, Circle Diagrams*** and ***Special-purpose Electric Machines*** have been added. Secondly, a large number of solved examples have been added to enhance the utility of the book. Thirdly, the book has been made design oriented keeping in view the growing demand of the industry. It is hoped that these features will make the book more useful.

Authors wish to thank their colleagues and friends who have contributed many valuable suggestions regarding the scope and content-sequence of the book. Authors are also indebted to M/s S. Chand & Company Ltd., New Delhi for bringing out this revised edition in a short time and pricing the book moderately inspite of heavy cost of paper and printing.

Errors might have crept in despite utmost care to avoid them. Authors shall be grateful if these are pointed out along with other suggestions for the improvement of the book.

V.K. MEHTA

ROHIT MEHTA

Created with Print2PDF. To remove this line, buy a license at: http://www.software602.com/

CONTENTS

1. ELECTROMECHANICAL ENERGY CONVERSION 1—25

Electromechanical Energy Conversion – Electromechanical Energy Conversion Devices – Features of Electromechanical Energy Conversion – Energy Balance Equation – Energy in Magnetic System – Energy and Coenergy – Field Energy and Mechanical Force – Linear System – Rotating Electrical Machines – Motors and Generators – Basic Construction of Electrical Machines – Commonly Used Electrical Machines – Multiply - Excited Magnetic System.

2. D.C. GENERATORS 26—80

Generator Principle – Simple Loop Generator – Action of Commutator – Construction of D.C. Generator – General Features of D.C. Armature Windings – Commutator Pitch (Y_C) – Pole-Pitch – Coil Span or Coil Pitch (Y_S) – Full-Pitched Coil – Types of D.C. Armature Windings – Further Armature Winding Terminology – General Rules For D.C. Armature Windings – Relations between Pitches for Simplex Lap Winding – Simplex Wave Winding – Design of Simplex Wave Winding – Dummy Coils – Applications of Lap and Wave Windings – Multiplex Windings – Function of Commutator and Brushes - E.M.F. Equation of a D.C. Generator - Armature Resistance (R_a) - Types of D.C. Generators – Separately Excited D.C. Generators – Self-Excited D.C. Generators – Brush Contact Drop – Electromechanical Energy Conversion in a Generator – Losses in a D.C. Machine – Constant and Variable Losses – Power Stages – Condition for Maximum Efficiency.

3. ARMATURE REACTION AND COMMUTATION 81—104

Armature Reaction – Geometrical and Magnetic Neutral Axes – Explanation of Armature Reaction – Demagnetising and Cross - Magnetising Conductors – Calculation of Demagnetising Ampere-Turns Per Pole (AT_d/Pole) – Cross-Magnetising Ampere-Turns Per Pole (AT_c/Pole) – Compensating Windings – AT/Pole for Compensating Windings – Commutation – Calculation of Reactance Voltage – Methods of Improving Commutation – Resistance Commutation – E.M.F. Commutation – Interpoles or Compoles – Equalising Connections – Important Facts about D.C. Generators.

4. D.C. GENERATOR CHARACTERISTICS 105—144

D.C. Generator Characteristics – Open Circuit Characteristic of a D.C. Generator – Characteristics of a Separately Excited D.C. Generator – Voltage Build-up in a Self-Excited Generator – Critical Field Resistance for a Shunt Generator – Critical Resistance for a Series Generator – Characteristics of Series Generator – Characteristics of a Shunt Generator – Critical External Resistance for Shunt Generator – How to Draw O.C.C. at Different Speeds ? – Critical Speed (N_C) – Conditions for Voltage Build-up of a shunt Generator – Compound Generator Characteristics – Voltage Regulation – Need for Parallel Operation of D.C. Generators – Conditions for Parallel Operation of Shunt Generators – Connecting Shunt Generators in Parallel – Load Sharing by Shunt Generators in Parallel – Parallel Operation of Compound Generators – Parallel Operation of Series Generators – D.C. Generator Specifications – Frame Size Versus Speed of Electrical Machines.

Created with Print2PDF. To remove this line, buy a license at: http://www.software602.com/

5. D.C. MOTORS **145—189**

D.C. Motor Principle – Working of D.C. Motor – Back or Counter E.M.F. – Significance of Back E.M.F. – Voltage Equation of D.C. Motor – Power Equation – Condition for Maximum Power – Types of D.C. Motors – Armature Torque of D.C. Motor – Shaft Torque (T_{sh}) – Brake Horse Power (b.h.p.) – Speed of a D.C. Motor – Speed Relations – Speed Regulation – Torque and Speed of a D.C. Motor – Armature Reaction in D.C. Motors – Commutation in D.C. Motors – Losses in a D.C. Motor – Efficiency of a D.C. Motor – Power Stages – D.C. Motor Characteristics – Characteristics of Shunt Motors – Characteristics of Series Motors – Compound Motors – Characteristics of Cumulative Compound Motors – Comparison of Three Types of Motors – Applications of D.C. Motors – Troubles in D.C. Motors.

6. SPEED CONTROL OF D.C. MOTORS **190—236**

Speed Control of D.C. Motors – Speed Control of D.C. Shunt Motors – Speed Control of D.C. Series Motors – Series-Parallel Control – Electric Braking – Speed Control of Compound Motors – Necessity of D.C. Motor Starter – Types of D.C. Motor Starters – Three-Point Starter – Four-Point Starter – Grading of Starting Resistance-Shunt Motors – Starter Step Calculations for D.C. Shunt Motor.

7. TESTING OF D.C. MACHINES **237—261**

Efficiency of a D.C. Machine – Efficiency by Direct Loading – Swinburne's Method for Determining Efficiency – Regenerative or Hopkinson's Test – Alternate Connections for Hopkinson's Test – Advantages of Hopkinson's Test – Retardation or Running Down Test – Moment of Inertia (I) of the Armature – Electric Loading in Retardation Test.

8. TRANSFORMER **262—370**

Transformer – Theory of an Ideal Transformer – E.M.F. Equation of a Transformer – Voltage Transformation Ratio (K) – Practical Transformer – Practical Transformer on No Load – Ideal Transformer on Load – Practical Transformer on Load – Impedance Ratio – Shifting Impedance in a Transformer – Importance of Shifting Impedances – Exact Equivalent Circuit of a Loaded Transformer – Simplified Equivalent Circuit of a Loaded Transformer – Approximate Equivalent Circuit of Loaded Transformer – Approximate Voltage Drop in a Transformer – Voltage Regulation – Transformer Tests – Open-Circuit or No-Load Test – Short-Circuit or Impedance Test – Advantages of Transformers Tests – Separation of Components of Core Losses – Why Transformer Rating in kVA ? – Sumpner or Back-to-Back Test – Losses in a Transformer – Efficiency of a Transformer – Efficiency from Transformer Tests – Condition for Maximum Efficiency – Output kVA Corresponding to Maximum Efficiency – All-Day (or Energy) Efficiency – Construction of a Transformer – Types of Transformer – Cooling of Transformers – Transformer Rating – Autotransformer – Theory of Autotransformer – Saving of Copper in Autotransformer – Advantages and Disadvantages of Autotransformers – Applications of Autotransformers – Conversion of Two-Winding Transformer into Autotransformer – Parallel Operation of Single-Phase Transformers – Single-Phase Equal Voltage Ratio Transformers in Parallel – Single-Phase Unequal Voltage Ratio Transformers in Parallel – Three-Phase Transformer – Three-Phase Transformer Connections – Three-Phase Transformation with Two Single-Phase Transformers – Open-Delta or V-V Connection – Power Factor of Transformers in V-V Circuit – Applications of Open-Delta or V-V Connection – Scott Connection or T-T Connection – Three Phase Transformer Connections and Phase Shift – Parallel Operation of 3-phase Transformers – Applications of Transformers – Instrument Transformers – Current Transformer (C.T.) – Potential Transformer (P.T.) – Advantages of Instrument Transformers.

Created with Print2PDF. To remove this line, buy a license at: http://www.software602.com/

9. THREE-PHASE INDUCTION MOTORS 371—449

Three-phase Induction Motor – Construction – Rotating Magnetic Field Due to 3-Phase Currents – Alternate Analysis for Rotating Magnetic Field – Principle of Operation – Slip – Rotor Current Frequency – Effect of Slip on the Rotor Circuit – Rotor Current – Rotor Torque – Starting Torque (T_S) – Condition for Maximum Starting Torque – Effect of Change of Supply Voltage – Starting Torque of 3-phase Induction Motors – Motor Under Load – Torque Under Running Conditions – Maximum Torque Under Running conditions – Torque-slip Characteristics – Full-load, Starting and Maximum Torques – Torque-speed Curve of 3-phase Induction Motor – Characteristics of Squirrel - Cage Motors – Speed Regulation of Induction Motors – Power Factor of Induction Motor – Measurement of Slip – Power Stages in an Induction Motor – Induction Motor Torque – Rotor Output – Induction Motor Torque Equation – Performance Curves of Squirrel-Cage Motor – Plugging of an Induction Motor – Braking Induction Motor with Direct Current – Induction Generator – Applications of Induction Generators – Complete Torque/Slip Curve of Induction Machine – Induction Motor and Transformer Compared – Equivalent Circuit of 3-ϕ Induction Motor at Slip s – Equivalent Circuit of the Rotor – Transformer Equivalent Circuit of Induction Motor – Power Relations – Approximate Equivalent Circuit of Induction Motor – Starting of 3-Phase Induction Motors – Methods of Starting 3-Phase Induction Motors – Methods of Starting Squirrel-Cage Motors – Starting of Slip-Ring Motors – Slip-Ring Motors Versus Squirrel Cage Motors – Induction Motor Rating – Abnormal Operation of 3-Phase Induction Motors – Double Squirrel-Cage Motors – Equivalent Circuit of Double Squirrel-Cage Motor.

10. CIRCLE DIAGRAMS 450—495

Circle Diagram for R-L Series Circuit – Importance of Circle Diagrams – Circle Diagram of 3-ϕ Induction Motor – Data Required for Circle Diagram – Tests to Obtain Data for Circle Diagram – Construction of Circle Diagram – Complete Circle Diagram of Induction Motor – Maximum Quantities from Circle Diagram – Speed Control of Induction Motors – Speed Control by Changing Number of Stator Poles – Speed Control by Changing Line Frequency – Speed Control by Changing Applied Voltage – Speed Control by Changing Rotor Circuit Resistance – Speed Control by Injecting Voltage in Rotor Circuit – Speed Control by Cascade Connection – Rotor Rheostat Starter for Slip-Ring Motors – Classes of Squirrel-Cage Induction Motors – Crawling of Induction Motors – Cogging – Linear Induction Motor (LIM) – Properties of Linear Induction Motor.

11. SINGLE-PHASE MOTORS 496—529

Types of Single-Phase Motors – Single-Phase Induction Motors – Double Field Revolving Theory – Making Single-phase Induction Motor Self-Starting – Rotating Magnetic Field from 2-Phase Supply – Split-Phase Induction Motor – Capacitor-Start Motor – Capacitor-Start Capacitor-Run Motor – Shaded-Pole Motor – Equivalent Circuit of Single-Phase Induction Motor – A.C. Series Motor or Universal Motor – Single-Phase Repulsion Motor – Repulsion-Start Induction-Run Motor – Repulsion-Induction Motor – Single-Phase Synchronous Motors – Reluctance Motor – Hysteresis Motor.

12. ALTERNATORS 530—615

Alternator – Construction of Alternator – Alternator Operation – Frequency – A.C. Armature Windings – Armature Winding of Alternator – Winding Factors – E.M.F. Equation of an Alternator – Armature Reaction in Alternator – Alternator on Load – Synchronous Reactance (X_s) – Phasor Diagram of a Loaded Alternator – Voltage Regulation – Determination of Voltage Regulation – Synchronous Impedance Method – Ampere-Turn Method – Procedure for AT Method – Zero Power Factor Method or Potier Method – Procedure for Potier Method – Power

Created with Print2PDF. To remove this line, buy a license at: http://www.software602.com/

Output in Cylindrical Rotor – Power/Power Angle Characteristics – Effect of Salient Poles – Two-Reactance Concept for Salient-Poles Machines – Power Developed in Salient-Pole Synchronous Generator – V Curves for Alternator – Parallel Operation of Alternators – Advantages of Parallel Operation of Alternators – Conditions for Paralleling Alternator with Infinite Busbars – Methods of Synchronisation – Synchronising Action – Synchronising Power – Alternators Connected to Infinite Busbars – Effect of Load on Synchronising Power – Sharing of Load Current by Two Alternators in Parallel – Alternators on Infinite Busbars – Effect of Change of Excitation and Mechanical Input – Hunting.

13. SYNCHRONOUS MOTORS 616—649

Construction – Some Facts about Synchronous Motor – Operating Principle – Making Synchronous Motor Self-Starting – Equivalent Circuit – Motor on Load – Pull-out Torque – Motor Phasor Diagram – Effect of Changing Field Excitation at Constant Load – Phasor Diagrams with Different Excitation – V Curves for Synchronous Motor - Power Relations – Motor Torque – Mechanical Power Developed by Motor – Power Factor of Synchronous Motors – Synchronous Condenser – Stopping Synchronous Motors – Applications of Synchronous Motors – Comparison of Synchronous and Induction Motors.

14. SPECIAL-PURPOSE ELECTRIC MACHINES 650—665

Stepper Motor – Permanent-Magnet (PM) Stepper Motor – Variable-Reluctance (VR) Stepper Motor – Hybrid Stepper Motor – Servomechanism – D.C. Servomotors – A.C. Servomotor – Switched Reluctance Motor (SRM) – Permanent-Magnet DC Motor – Brushless D.C. Motors.

INDEX 666–669

Created with Print2PDF. To remove this line, buy a license at: http://www.software602.com/

Chapter (1)

D.C. Generators

Introduction

Although a far greater percentage of the electrical machines in service are a.c. machines, the d.c. machines are of considerable industrial importance. The principal advantage of the d.c. machine, particularly the d.c. motor, is that it provides a fine control of speed. Such an advantage is not claimed by any a.c. motor. However, d.c. generators are not as common as they used to be, because direct current, when required, is mainly obtained from an a.c. supply by the use of rectifiers. Nevertheless, an understanding of d.c. generator is important because it represents a logical introduction to the behaviour of d.c. motors. Indeed many d.c. motors in industry actually operate as d.c. generators for a brief period. In this chapter, we shall deal with various aspects of d.c. generators.

1.1 Generator Principle

An electric generator is a machine that converts mechanical energy into electrical energy. An electric generator is based on the principle that whenever flux is cut by a conductor, an e.m.f. is induced which will cause a current to flow if the conductor circuit is closed. The direction of induced e.m.f. (and hence current) is given by Fleming's right hand rule. Therefore, the essential components of a generator are:

(a) a magnetic field
(b) conductor or a group of conductors
(c) motion of conductor w.r.t. magnetic field.

1.2 Simple Loop Generator

Consider a single turn loop ABCD rotating clockwise in a uniform magnetic field with a constant speed as shown in Fig.(1.1). As the loop rotates, the flux linking the coil sides AB and CD changes continuously. Hence the e.m.f. induced in these coil sides also changes but the e.m.f. induced in one coil side adds to that induced in the other.

(i) When the loop is in position no. 1 [See Fig. 1.1], the generated e.m.f. is zero because the coil sides (AB and CD) are cutting no flux but are moving parallel to it

(ii) When the loop is in position no. 2, the coil sides are moving at an angle to the flux and, therefore, a low e.m.f. is generated as indicated by point 2 in Fig. (1.2).

(iii) When the loop is in position no. 3, the coil sides (AB and CD) are at right angle to the flux and are, therefore, cutting the flux at a maximum rate. Hence at this instant, the generated e.m.f. is maximum as indicated by point 3 in Fig. (1.2).

(iv) At position 4, the generated e.m.f. is less because the coil sides are cutting the flux at an angle.

(v) At position 5, no magnetic lines are cut and hence induced e.m.f. is zero as indicated by point 5 in Fig. (1.2).

(vi) At position 6, the coil sides move under a pole of opposite polarity and hence the direction of generated e.m.f. is reversed. The maximum e.m.f. in this direction (i.e., reverse direction, See Fig. 1.2) will be when the loop is at position 7 and zero when at position 1. This cycle repeats with each revolution of the coil.

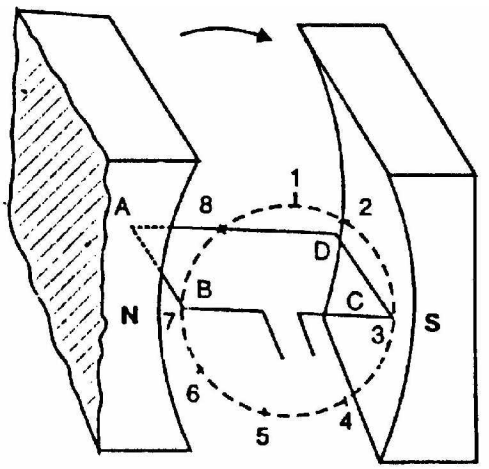

Fig. (1.1)

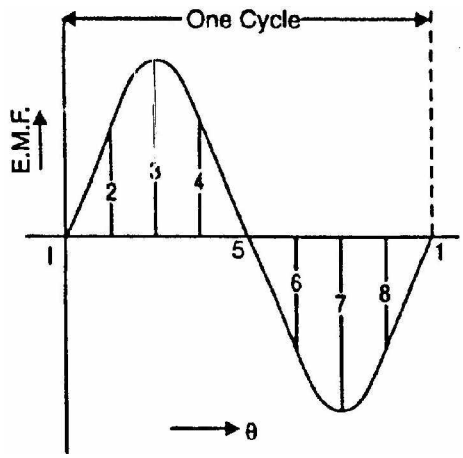

Fig. (1.2)

Note that e.m.f. generated in the loop is alternating one. It is because any coil side, say AB has e.m.f. in one direction when under the influence of N-pole and in the other direction when under the influence of S-pole. If a load is connected across the ends of the loop, then alternating current will flow through the load. The alternating voltage generated in the loop can be converted into direct voltage by a device called commutator. We then have the d.c. generator. In fact, a commutator is a mechanical rectifier.

1.3 Action Of Commutator

If, somehow, connection of the coil side to the external load is reversed at the same instant the current in the coil side reverses, the current through the load

will be direct current. This is what a commutator does. Fig. (1.3) shows a commutator having two segments C_1 and C_2. It consists of a cylindrical metal ring cut into two halves or segments C_1 and C_2 respectively separated by a thin sheet of mica. The commutator is mounted on but insulated from the rotor shaft. The ends of coil sides AB and CD are connected to the segments C_1 and C_2 respectively as shown in Fig. (1.4). Two stationary carbon brushes rest on the commutator and lead current to the external load. With this arrangement, the commutator at all times connects the coil side under S-pole to the +ve brush and that under N-pole to the –ve brush.

(i) In Fig. (1.4), the coil sides AB and CD are under N-pole and S-pole respectively. Note that segment C_1 connects the coil side AB to point P of the load resistance R and the segment C_2 connects the coil side CD to point Q of the load. Also note the direction of current through load. It is from Q to P.

(ii) After half a revolution of the loop (i.e., 180° rotation), the coil side AB is under S-pole and the coil side CD under N-pole as shown in Fig. (1.5). The currents in the coil sides now flow in the reverse direction but the segments C_1 and C_2 have also moved through 180° i.e., segment C_1 is now in contact with +ve brush and segment C_2 in contact with –ve brush. Note that commutator has reversed the coil connections to the load i.e., coil side AB is now connected to point Q of the load and coil side CD to the point P of the load. Also note the direction of current through the load. It is again from Q to P.

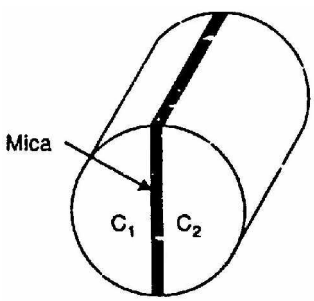

Fig.(1.3)

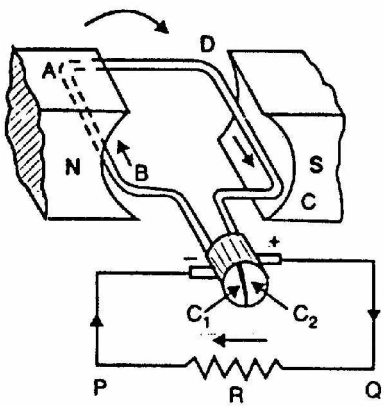

Fig.(1.4)

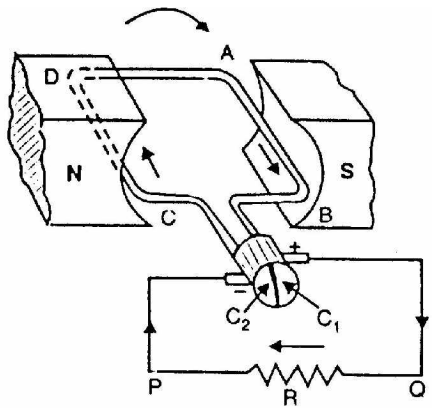

Fig.(1.5)

Thus the alternating voltage generated in the loop will appear as direct voltage across the brushes. The reader may note that e.m.f. generated in the armature winding of a d.c. generator is alternating one. It is by the use of commutator that we convert the generated alternating e.m.f. into direct voltage. The purpose of brushes is simply to lead current from the rotating loop or winding to the external stationary load.

The variation of voltage across the brushes with the angular displacement of the loop will be as shown in Fig. (1.6). This is not a steady direct voltage but has a pulsating character. It is because the voltage appearing across the brushes varies from zero to maximum value and back to zero twice for each revolution of the loop. A pulsating direct voltage such as is produced by a single loop is not suitable for many commercial uses. What we require is the steady direct voltage. This can be achieved by using a large number of coils connected in series. The resulting arrangement is known as armature winding.

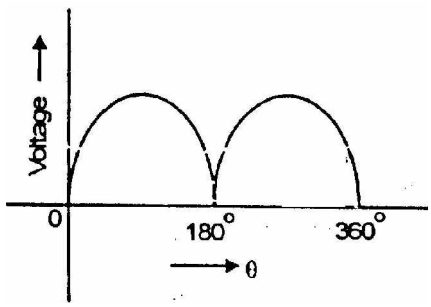

Fig. (1.6)

1.4 Construction of d.c. Generator

The d.c. generators and d.c. motors have the same general construction. In fact, when the machine is being assembled, the workmen usually do not know whether it is a d.c. generator or motor. Any d.c. generator can be run as a d.c. motor and vice-versa. All d.c. machines have five principal components viz., (i) field system (ii) armature core (iii) armature winding (iv) commutator (v) brushes [See Fig. 1.7].

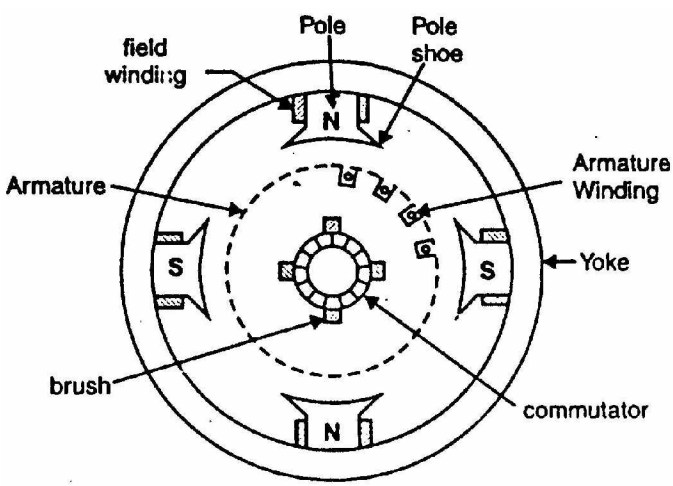

Fig. (1.7)

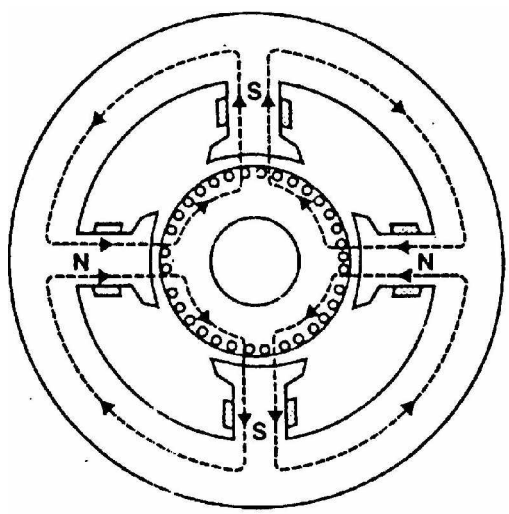

Fig. (1.8)

(i) Field system

The function of the field system is to produce uniform magnetic field within which the armature rotates. It consists of a number of salient poles (of course, even number) bolted to the inside of circular frame (generally called yoke). The

yoke is usually made of solid cast steel whereas the pole pieces are composed of stacked laminations. Field coils are mounted on the poles and carry the d.c. exciting current. The field coils are connected in such a way that adjacent poles have opposite polarity.

The m.m.f. developed by the field coils produces a magnetic flux that passes through the pole pieces, the air gap, the armature and the frame (See Fig. 1.8). Practical d.c. machines have air gaps ranging from 0.5 mm to 1.5 mm. Since armature and field systems are composed of materials that have high permeability, most of the m.m.f. of field coils is required to set up flux in the air gap. By reducing the length of air gap, we can reduce the size of field coils (i.e. number of turns).

(ii) Armature core

The armature core is keyed to the machine shaft and rotates between the field poles. It consists of slotted soft-iron laminations (about 0.4 to 0.6 mm thick) that are stacked to form a cylindrical core as shown in Fig (1.9). The laminations (See Fig. 1.10) are individually coated with a thin insulating film so that they do not come in electrical contact with each other. The purpose of laminating the core is to reduce the eddy current loss. The laminations are slotted to accommodate and provide mechanical security to the armature winding and to give shorter air gap for the flux to cross between the pole face and the armature "teeth".

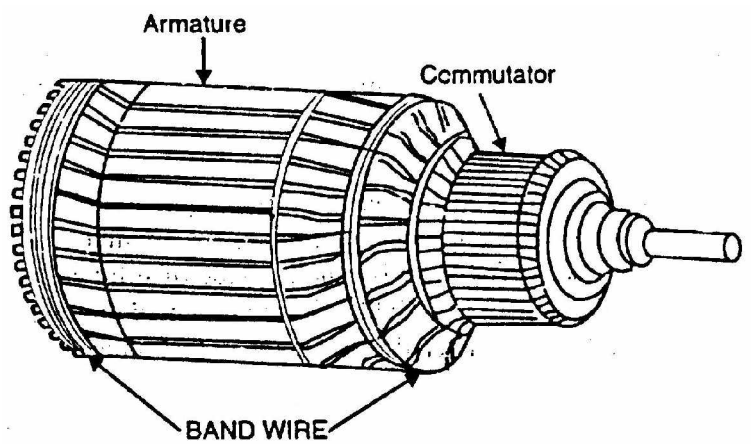

Fig. (1.9)

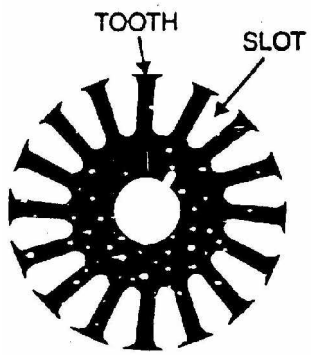

Fig. (1.10)

(iii) Armature winding

The slots of the armature core hold insulated conductors that are connected in a suitable manner. This is known as armature winding. This is the winding in which "working" e.m.f. is induced. The armature conductors are connected in series-parallel; the conductors being connected in series so as to increase the

voltage and in parallel paths so as to increase the current. The armature winding of a d.c. machine is a closed-circuit winding; the conductors being connected in a symmetrical manner forming a closed loop or series of closed loops.

(iv) Commutator

A commutator is a mechanical rectifier which converts the alternating voltage generated in the armature winding into direct voltage across the brushes. The commutator is made of copper segments insulated from each other by mica sheets and mounted on the shaft of the machine (See Fig 1.11). The armature conductors are soldered to the commutator segments in a suitable manner to give rise to the armature winding. Depending upon the manner in which the armature conductors are connected to the commutator segments, there are two types of armature winding in a d.c. machine viz., (a) lap winding (b) wave winding.

Great care is taken in building the commutator because any eccentricity will cause the brushes to bounce, producing unacceptable sparking. The sparks may bum the brushes and overheat and carbonise the commutator.

(v) Brushes

The purpose of brushes is to ensure electrical connections between the rotating commutator and stationary external load circuit. The brushes are made of carbon and rest on the commutator. The brush pressure is adjusted by means of adjustable springs (See Fig. 1.12). If the brush pressure is very large, the friction produces heating of the commutator and the brushes. On the other hand, if it is too weak, the imperfect contact with the commutator may produce sparking.

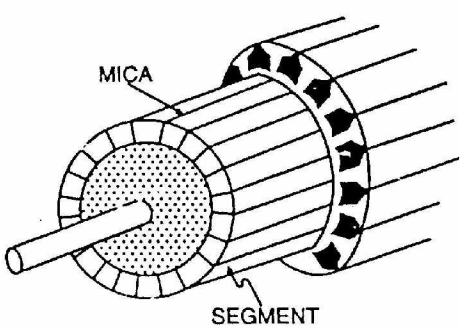

Fig. (1.11)

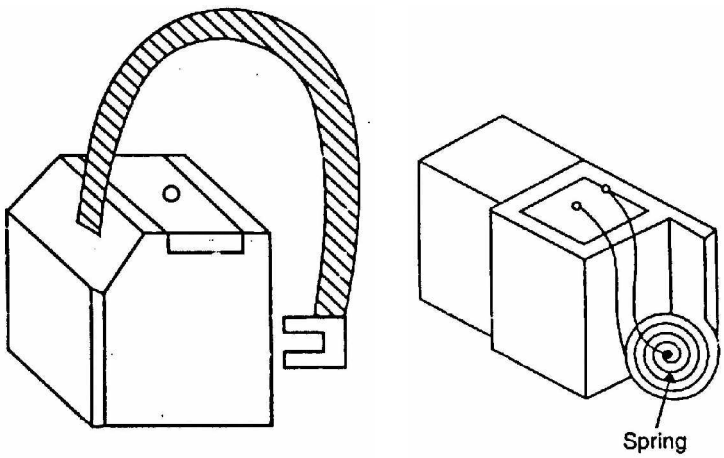

Fig. (1.12)

Multipole machines have as many brushes as they have poles. For example, a 4-pole machine has 4 brushes. As we go round the commutator, the successive brushes have positive and negative polarities. Brushes having the same polarity

are connected together so that we have two terminals viz., the +ve terminal and the –ve terminal.

1.5 General Features OF D.C. Armature Windings

(i) A d.c. machine (generator or motor) generally employs windings distributed in slots over the circumference of the armature core. Each conductor lies at right angles to the magnetic flux and to the direction of its movement Therefore, the induced e.m.f. in the conductor is given by;

$$e = B^{a} v \qquad \text{volts}$$

where B = magnetic flux density in Wb/m^2
^{a} = length of the conductor in metres
v = velocity (in m/s) of the conductor

(ii) The armature conductors are connected to form coils. The basic component of all types of armature windings is the armature coil. Fig. (1.13) (i) shows a single-turn coil. It has two conductors or coil sides connected at the back of the armature. Fig. 1.13 (ii) shows a 4-turn coil which has 8 conductors or coil sides.

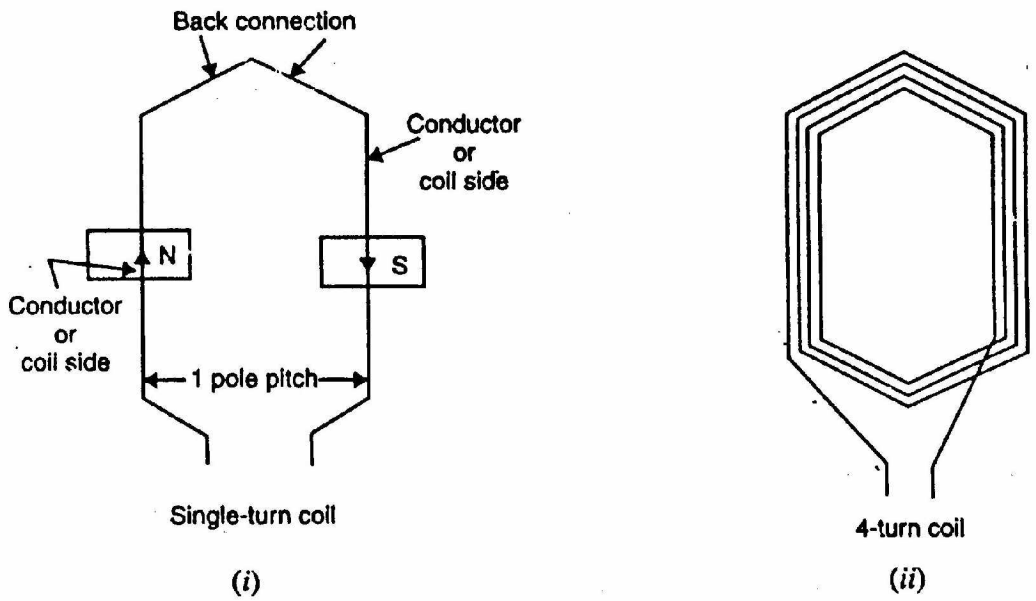

Fig. (1.13)

The coil sides of a coil are placed a pole span apart i.e., one coil side of the coil is under N-pole and the other coil side is under the next S-pole at the corresponding position as shown in Fig. 1.13 (i). Consequently the e.m.f.s of the coil sides add together. If the e.m.f. induced in one conductor is 2.5 volts, then the e.m.f. of a single-turn coil will be = 2 × 2.5 = 5 volts. For the same flux and speed, the e.m.f. of a 4-turn coil will be = 8 × 2.5 = 20 V.

(iii) Most of d.c. armature windings are double layer windings i.e., there are two coil sides per slot as shown in Fig. (1.14). One coil side of a coil lies at the top of a slot and the other coil side lies at the bottom of some other slot. The coil ends will then lie side by side. In two-layer winding, it is desirable to number the coil sides rather than the slots. The coil sides are numbered as indicated in Fig. (1.14). The coil sides at the top of slots are given odd numbers and those at the bottom are given even numbers. The coil sides are numbered in order round the armature.

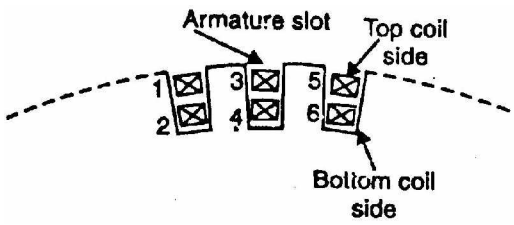

Fig. (1.14)

As discussed above, each coil has one side at the top of a slot and the other side at the bottom of another slot; the coil sides are nearly a pole pitch apart. In connecting the coils, it is ensured that top coil side is joined to the bottom coil side and vice-versa. This is illustrated in Fig. (1.15). The coil side 1 at the top of a slot is joined to coil side 10 at the bottom of another slot about a pole pitch apart. The coil side 12 at the bottom of a slot is joined to coil side 3 at the top of another slot. How coils are connected at the back of the armature and at the front (commutator end) will be discussed in later sections. It may be noted that as far as connecting the coils is concerned, the number of turns per coil is immaterial. For simplicity, then, the coils in winding diagrams will be represented as having only one turn (i.e., two conductors).

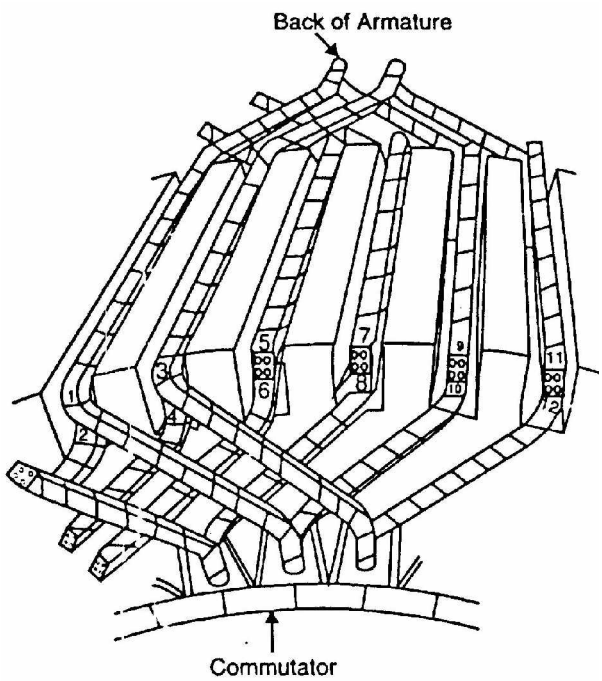

Fig. (1.15)

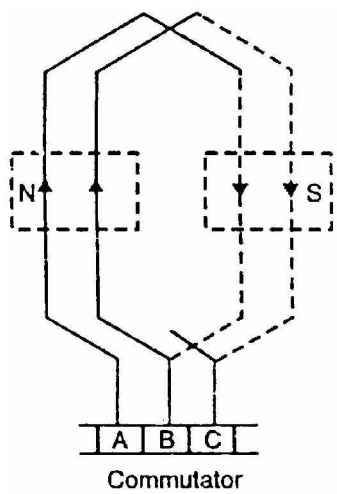

Fig. (1.16)

(iv) The coil sides are connected through commutator segments in such a manner as to form a series-parallel system; a number of conductors are connected in series so as to increase the voltage and two or more such series-connected paths in parallel to share the current. Fig. (1.16) shows how the two coils connected through commutator segments (A, R, C etc) have their e.m.f.s added together. If voltage induced in each conductor is 2-5 V, then voltage between segments A and C = 4 × 2.5 = 10 V. It may be noted here that in the conventional way of representing a developed armature winding, full lines represent top coil sides (i.e., coil sides lying at the top of a slot) and dotted lines represent the bottom coil sides (i.e., coil sides lying at the bottom of a slot).

(v) The d.c. armature winding is a closed circuit winding. In such a winding, if one starts at some point in the winding and traces through the winding, one will come back to the starting point without passing through any external connection. D.C. armature windings must be of the closed type in order to provide for the commutation of the coils.

1.6 Commutator Pitch (Y_C)

The commutator pitch is the number of commutator segments spanned by each coil of the winding. It is denoted by Y_C.

In Fig. (1.17), one side of the coil is connected to commutator segment 1 and the other side connected to commutator segment 2. Therefore, the number of commutator segments spanned by the coil is 1 i.e., $Y_C = 1$. In Fig. (1.18), one side of the coil is connected to commutator segment 1 and the other side to commutator segment 8. Therefore, the number of commutator segments spanned by the coil = 8 – 1 = 7 segments i.e., $Y_C = 7$. The commutator pitch of a winding is always a whole number. Since each coil has two ends and as two coil connections are joined at each commutator segment,

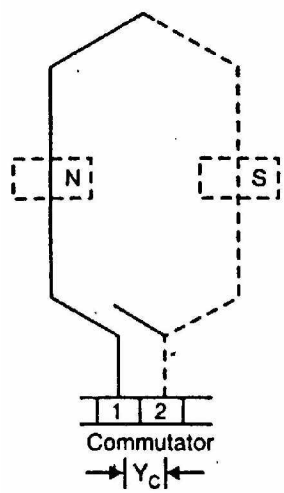

Fig. (1.17)

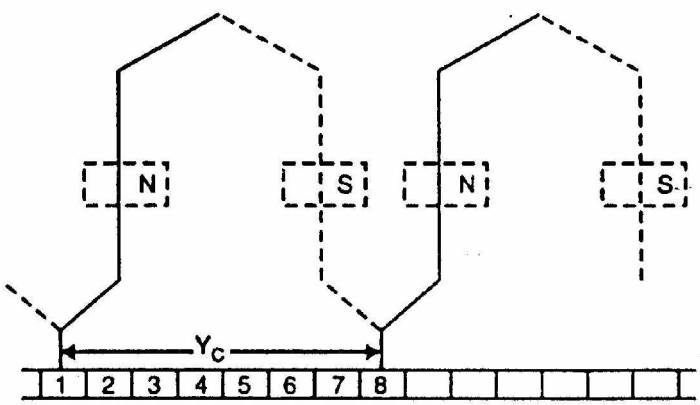

Fig. (1.18)

$\therefore$ Number of coils = Number of commutator segments

For example, if an armature has 30 conductors, the number of coils will be 30/2 = 15. Therefore, number of commutator segments is also 15. Note that commutator pitch is the most important factor in determining the type of d.c. armature winding.

1.7 Pole-Pitch

It is the distance measured in terms of number of armature slots (or armature conductors) per pole. Thus if a 4-pole generator has 16 coils, then number of slots = 16.

$$\therefore \quad \text{Pole pitch} = \frac{16}{4} = 4 \text{ slots}$$

Also $$\text{Pole pitch} = \frac{\text{No. of conductors}}{\text{No. of poles}} = \frac{16 \times 2}{4} = 8 \text{ conductors}$$

1.8 Coil Span or Coil Pitch (Y_S)

It is the distance measured in terms of the number of armature slots (or armature conductors) spanned by a coil. Thus if the coil span is 9 slots, it means one side of the coil is in slot 1 and the other side in slot 10.

1.9 Full-Pitched Coil

If the coil-span or coil pitch is equal to pole pitch, it is called full-pitched coil (See Fig. 1.19). In this case, the e.m.f.s in the coil sides are additive and have a phase difference of 0°. Therefore, e.m.f. induced in the coil is maximum. If e.m.f. induced in one coil side is 2-5 V, then e.m.f. across the coil terminals = 2 × 2.5 = 5 V. Therefore, coil span should always be one pole pitch unless there is a good reason for making it shorter.

Fractional pitched coil. If the coil span or coil pitch is less than the pole pitch, then it is called fractional pitched coil (See Fig. 1.20). In this case, the phase difference between the e.m.f.s in the two coil sides will not be zero so that the e.m.f. of the coil will be less compared to full-pitched coil. Fractional pitch winding requires less copper but if the pitch is too small, an appreciable reduction in the generated e.m.f. results.

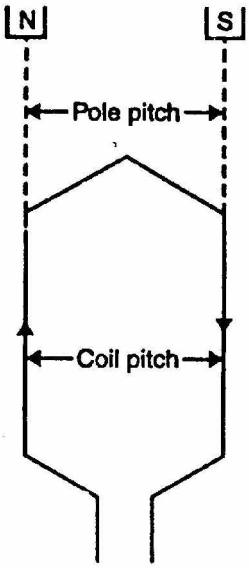

Fig. (1.19)

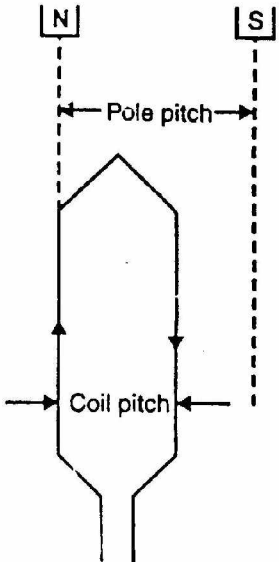

Fig. (1.20)

1.10 Types of D.C. Armature Windings

The different armature coils in a d.c. armature Winding must be connected in series with each other by means of end connections (back connection and front connection) in a manner so that the generated voltages of the respective coils will aid each other in the production of the terminal e.m.f. of the winding. Two basic methods of making these end connections are:

1. Simplex lap winding
2. Simplex wave winding

1. Simplex lap winding.

For a simplex lap winding, the commutator pitch $Y_C = 1$ and coil span $Y_S \simeq$ pole pitch. Thus the ends of any coil are brought out to adjacent commutator segments and the result of this method of connection is that all the coils of the armature .ire in sequence with the last coil connected to the first coil. Consequently, closed circuit winding results. This is illustrated in Fig. (1.21) where a part of the lap winding is shown. Only two coils are shown for simplicity. The name lap comes from the way in which successive coils overlap the preceding one.

2. Simplex wave winding

For a simplex wave winding, the commutator pitch $Y_C \simeq 2$ pole pitches and coil span = pole pitch. The result is that the coils under consecutive pole pairs will be joined together in series thereby adding together their e.m.f.s [See Fig. 1.22]. After passing once around the armature, the winding falls in a slot to the left or

right of the starting point and thus connecting up another circuit. Continuing in this way, all the conductors will be connected in a single closed winding. This winding is called wave winding from the appearance (wavy) of the end connections.

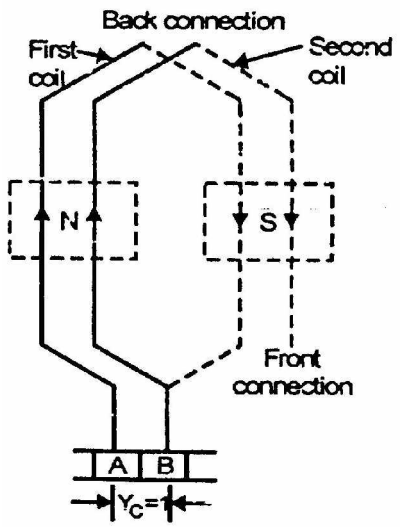

Fig. (1.21)

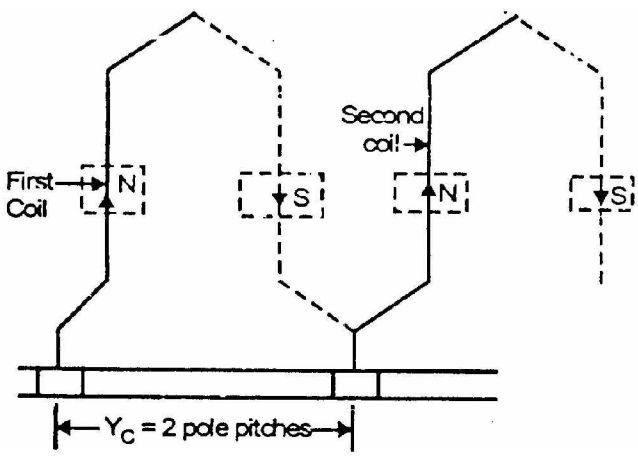

Fig. (1.22)

1.11 Further Armature Winding Terminology

Apart from the terms discussed earlier, the following terminology requires discussion:

(i) Back Pitch (Y_B)

It is the distance measured in terms of armature conductors between the two sides of a coil at the back of the armature (See Fig. 1.23). It is denoted by Y_B For example, if a coil is formed by connecting conductor 1 (upper conductor in a slot) to conductor 12 (bottom conductor in another slot) at the back of the armature, then back pitch is $Y_B = 12 - 1 = 11$ conductors.

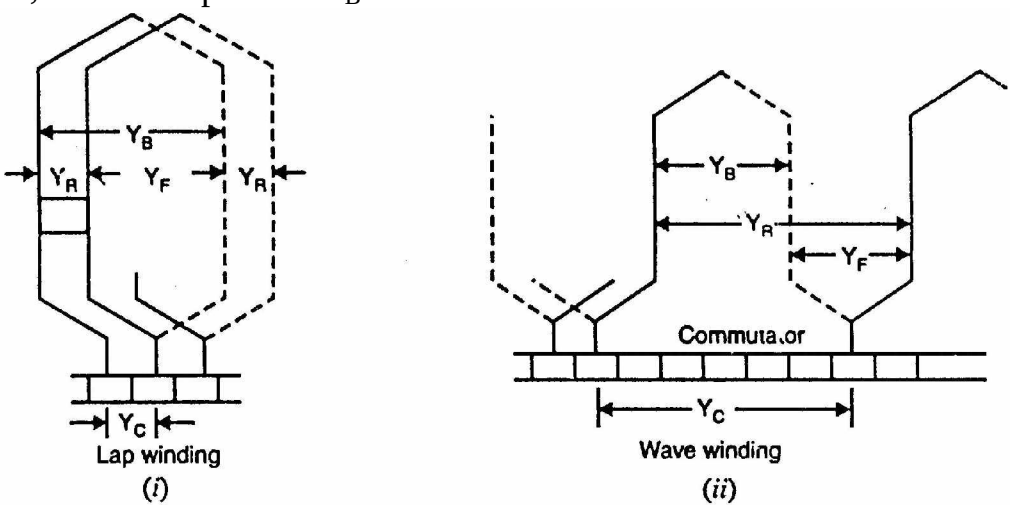

Fig. (1.23)

(ii) Front Pitch (Y_F)

It is the distance measured in terms of armature conductors between the coil sides attached to any one commutator segment [See Fig. 1.23]. It is denoted by Y_F For example, if coil side 12 and coil side 3 are connected to the same commutator segment, then front pitch is $Y_F = 12 - 3 = 9$ conductors.

(iii) Resultant Pitch (YR)

It is the distance (measured in terms of armature conductors) between the beginning of one coil and the beginning of the next coil to which it is connected (See Fig. 1.23). It is denoted by Y_R. Therefore, the resultant pitch is the algebraic sum of the back and front pitches.

(iv) Commutator Pitch (Y_C)

It is the number of commutator segments spanned by each coil of the armature winding.

For simplex lap winding, $Y_C = 1$

For simplex wave winding, $Y_C \simeq$ 2 pole pitches (segments)

(v) Progressive Winding

A progressive winding is one in which, as one traces through the winding, the connections to the commutator will progress around the machine in the same direction as is being traced along the path of each individual coil. Fig. (1.24) (i) shows progressive lap winding. Note that $Y_B > Y_F$ and $Y_C = +1$.

(vi) Retrogressive Winding

A retrogressive winding is one in which, as one traces through the winding, the connections to the commutator will progress around the machine in the opposite direction to that which is being traced along the path of each individual coil. Fig. (1.24) (ii) shows retrogressive lap winding. Note that $Y_F > Y_B$ and $Y_C = -1$. A retrogressive winding is seldom used because it requires more copper.

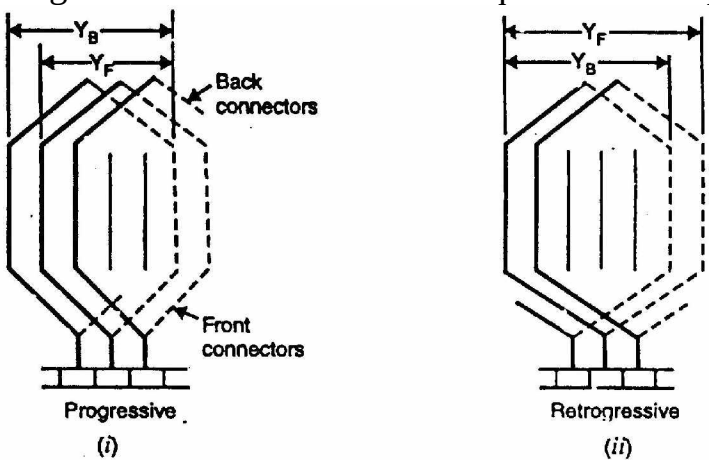

Fig. (1.24)

1.12 General Rules For D.C. Armature Windings

In the design of d.c. armature winding (lap or wave), the following rules may be followed:

(i) The back pitch (Y_B) as well as front pitch (Y_F) should be nearly equal to pole pitch. This will result in increased e.m.f. in the coils.

(ii) Both pitches (Y_B and Y_F) should be odd. This will permit all end connections (back as well as front connection) between a conductor at the top of a slot and one at the bottom of a slot.

(iii) The number of commutator segments is equal to the number of slots or coils (or half the number of conductors).

No. of commutator segments = No. of slots = No. of coils

It is because each coil has two ends and two coil connections are joined at each commutator segment

(iv) The winding must close upon itself i.e. it should be a closed circuit winding.

1.13 Relations between Pitches for Simplex Lap Winding

In a simplex lap winding, the various pitches should have the following relation:

(i) The back and front pitches are odd and are of opposite signs. They differ numerically by 2,

$\therefore \quad Y_B = Y_B = Y_F \pm 2$

$Y_B = Y_F + 2$ for progressive winding

$Y_B = Y_F - 2$ for retrogressive winding

(ii) Both Y_B and Y_F should be nearly equal to pole pitch.

(iii) Average pitch $=(Y_B + Y_F)/2$. It equals pole pitch (= Z/P).

(iv) Commutator pitch, $Y_C = \pm 1$

$Y_C = +1$ for progressive winding

$Y_C = -1$ for retrogressive winding

(v) The resultant pitch (Y_B) is even, being the arithmetical difference of two odd numbers viz., Y_B and Y_F.

(vi) If Z = number of armature conductors and P = number of poles, then,

$$\text{Polr - pitch} = \frac{Z}{P}$$

Since Y_B and Y_F both must be. about one pole pitch and differ numerically by 2,

$$\left.\begin{aligned} Y_B &= \frac{Z}{P} + 1 \\ Y_F &= \frac{Z}{P} - 1 \end{aligned}\right\} \quad \text{For progressive winding}$$

$$\left.\begin{aligned} Y_B &= \frac{Z}{P} - 1 \\ Y_F &= \frac{Z}{P} + 1 \end{aligned}\right\} \quad \text{For retrogressive winding}$$

It is clear that Z/P must be an even number to make the winding possible.

Developed diagram

Developed diagram is obtained by imagining the cylindrical surface of the armature to be cut by an axial plane and then flattened out. Fig. (1.25) (i) shows the developed diagram of the winding. Note that full lines represent the top coil sides (or conductors) and dotted lines represent the bottom coil sides (or conductors).

The winding goes from commutator segment 1 by conductor 1 across the back to conductor 12 and at the front to commutator segment 2, thus forming a coil. Then from commutator segment 2, through conductors 3 and 14 back to commutator segment 3 and so on till the winding returns to commutator segment 1 after using all the 40 conductors.

Position and number of brushes

We now turn to find the position and the number of brushes required. The brushes, like field poles, remain fixed in space as the commutator and winding revolve. It is very important that brushes are in correct position relative to the field poles. The arrowhead marked “rotation” in Fig. (1.25) (i) shows the direction of motion of the conductors. By right-hand rule, the direction of e.m.f. in each conductor will be as shown.

In order to find the position of brushes, the ring diagram shown in Fig. (1.25) (ii) is quite helpful. A positive brush will be placed on that commutator segment where the currents in the coils are meeting to flow out of the segment. A negative brush will be placed on that commutator segment where the currents in the coils are meeting to flow in. Referring to Fig. (1.25) (i), there are four brushes—two positive and two negative. Therefore, we arrive at a very important conclusion that in a simplex lap winding, the number of brushes is equal to the number of poles. If the brushes of the same polarity are connected together, then all the armature conductors are connected in four parallel paths; each path containing an equal number of conductors in series. This is illustrated in Fig. (1.26).

Since segments 6 and 16 are connected together through positive brushes and segments 11 and 1 are connected together through negative brushes, there are four parallel paths, each containing 10 conductors in series. Therefore, in a simplex lap winding, the number of parallel paths is equal to the number of poles.

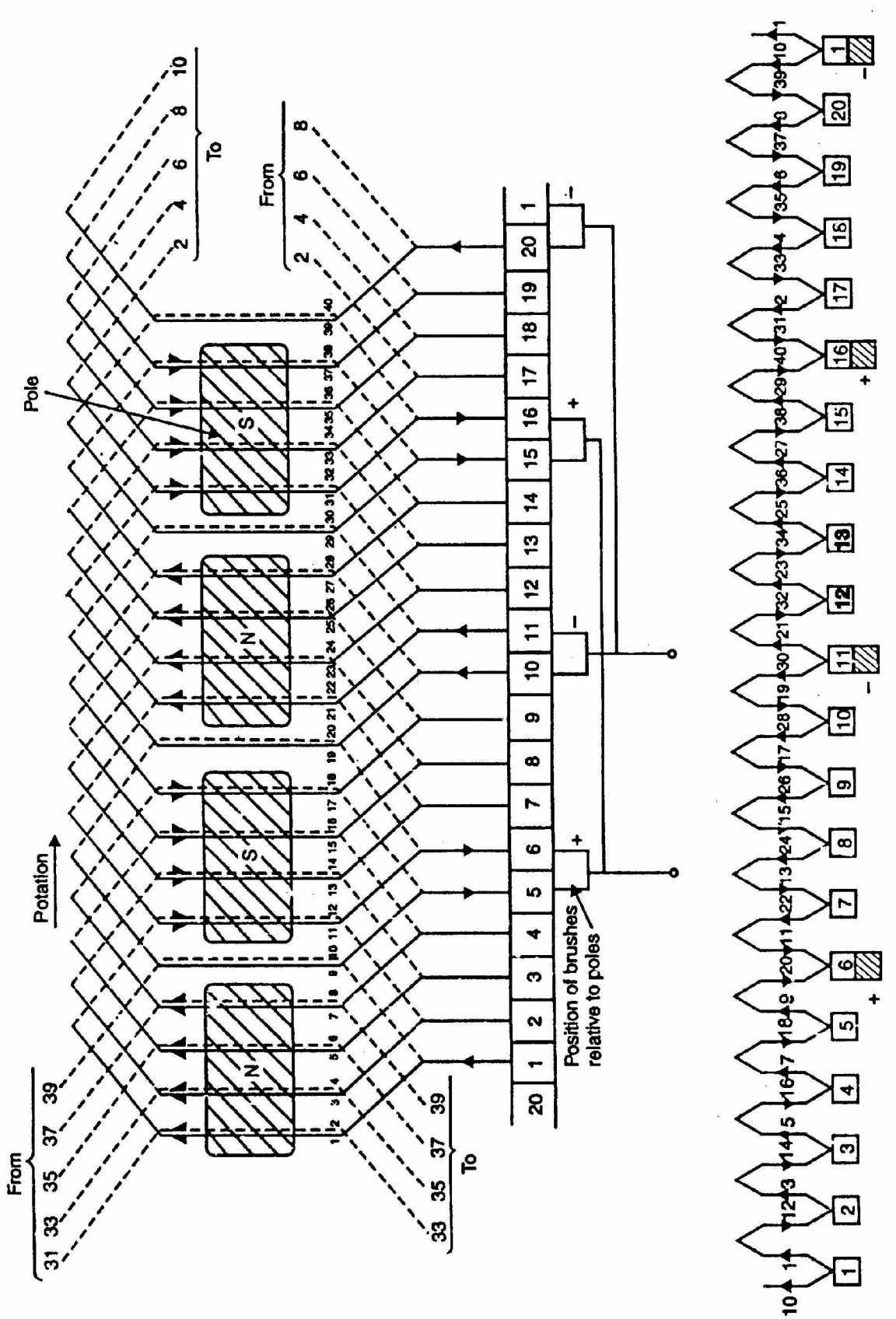
Pole
Potation
From
To
Position of brushes relative to poles
N
S

(i) (ii)

Fig. (1.25)

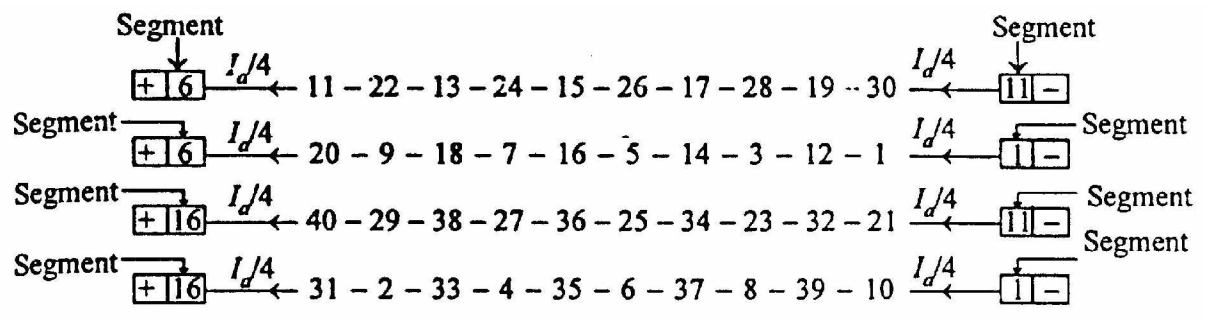

Fig. (1.26)

Conclusions

From the above discussion, the following conclusions can be drawn:

(i) The total number of brushes is equal to the number of poles.

(ii) The armature winding is divided into as many parallel paths as the number of poles. If the total number of armature conductors is Z and P is the number of poles, then,

Number of conductors/path = Z/P

In the present case, there are 40 armature conductors and 4 poles. Therefore, the armature winding has 4 parallel paths, each consisting of 10 conductors in series.

(iii) E.M.F. generated = E.M.F. per parallel path

$$= \text{average e.m.f. per conductor} \times \frac{Z}{P}$$

(iv) Total armature current, $I_a = P \times$ current per parallel path

(v) The armature resistance can be found as under:

Let $\mathbf{a}$ = length of each conductor; a = cross-sectional area

A = number of parallel paths = P for simplex lap winding

$$\text{Resistance of whole winding, } R = \frac{\rho \mathbf{a}}{a} \times Z$$

$$\text{Resistance per parallel path} = \frac{R}{A} = \frac{\rho \mathbf{a} Z}{a \times A}$$

Since there are A (= P) parallel paths, armature resistance R_a is given by:

$$R_a = \frac{\text{Resistance per parallel path}}{A} = \frac{1}{A}\left(\frac{\rho \mathbf{a} Z}{a \times A}\right)$$

$$\therefore \quad R_a = \frac{\rho \mathbf{a} Z}{aA^2}$$

1.14 Simplex Wave Winding

The essential difference between a lap winding and a wave winding is in the commutator connections. In a simplex lap winding, the coils approximately pole pitch apart are connected in series and the commutator pitch $Y_C = \pm 1$ segment. As a result, the coil voltages add. This is illustrated in Fig. (1.27). In a simplex wave winding, the coils approximately pole pitch apart are connected in series and the commutator pitch $Y_C \simeq 2$ pole pitches (segments). Thus in a wave winding, successive coils "wave" forward under successive poles instead of "lapping" back on themselves as in the lap winding. This is illustrated in Fig. (1.28).

The simplex wave winding must not close after it passes once around the armature but it must connect to a commutator segment adjacent to the first and the next coil must be adjacent to the first as indicated in Fig. (1.28). This is repeated each time around until connections are made to all the commutator segments and all the slots are occupied after which the winding automatically returns to the starting point. If, after passing once around the armature, the winding connects to a segment to the left of the starting point, the winding is retrogressive [See Fig. 1.28 (i)]. If it connects to a segment to the right of the starting point, it is progressive [See Fig. 1.28 (ii)]. This type of winding is called wave winding because it passes around the armature in a wave-like form.

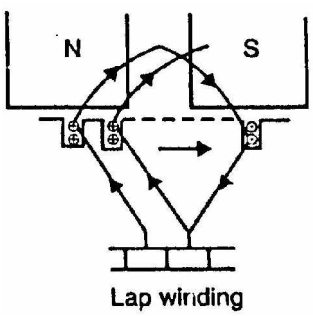

Fig. (1.27)

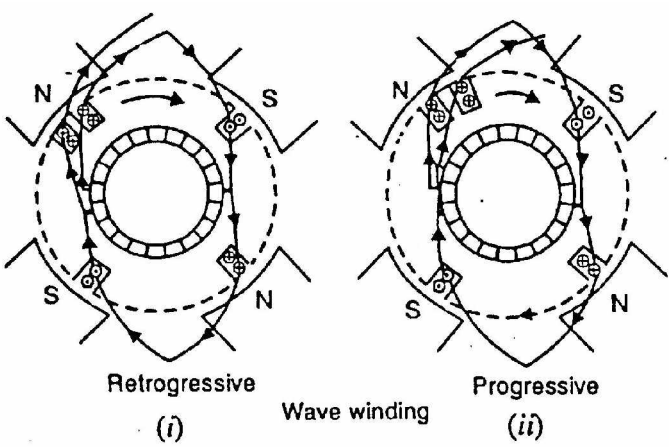

Fig. (1.28)

Various pitches

The various pitches in a wave winding are defined in a manner similar to lap winding.

(i) The distance measured in terms of armature conductors between the two sides of a coil at the back of the armature is called back pitch Y_B (See Fig. 1.29). The Y_B must be an odd integer so that a top conductor and a bottom conductor will be joined.

(ii) The distance measured in terms of armature conductors between the coil sides attached to any one commutator segment is called front pitch Y_B (See Fig. 1.29). The Y_B must be an odd integer so that a top conductor and a bottom conductor will be joined.

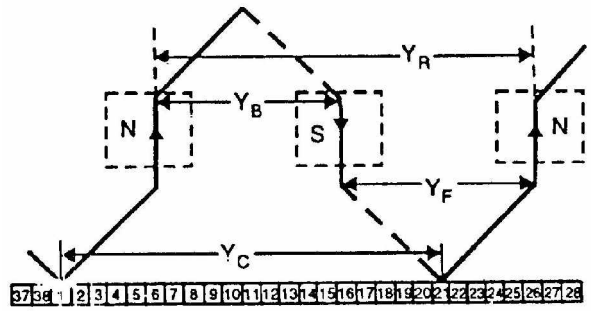

Fig. (1.29))

(iii) Resultant pitch, $Y_R = Y_B + Y_F$ (See Fig. 1.29)
The resultant pitch must be an even integer since Y_B and Y_F are odd. Further Y_R is approximately two pole pitches because Y_B as well as Y_F is approximately one pole pitch.

(iv) Average pitch, $Y_A = \dfrac{Y_B + Y_F}{2}$. When one tour of armature has been completed, the winding should connect to the next top conductor (progressive) or to the preceding top conductor (retrogressive). In either case, the difference will be of 2 conductors or one slot. If P is the number of poles and Z is the total number of armature conductors, then,

$$P \times Y_A = Z \pm 2$$

or $$Y_A = \frac{Z+2}{P} \qquad \text{(i)}$$

Since P is always even and $Z = PY_A \pm 2$, Z must be even. It means that $Z \pm 2/P$ must be an integer. In Eq.(i), plus sign will give progressive winding and the negative sign retrogressive winding.

(v) The number of commutator segments spanned by a coil is called commutator pitch (Y_C) (See Fig. 1.29). Suppose in a simplex wave winding,

P = Number of poles; N_C = Number of commutator segments;
Y_C = Commutator pitch.

$\therefore$ Number of pair of poles = P/2

If $Y_C \times P/2 = N_C$, then the winding will close on itself in passing once around the armature. In order to connect to the adjacent conductor and permit the winding to proceed,

$$Y_C \times \frac{P}{2} = N_C \pm 1$$

or $$Y_C = \frac{2N_C \pm 2}{P} = \frac{N_C \pm 1}{P/2} = \frac{\text{No. of commutator seg.} \pm 1}{\text{Number of pair of poles}}$$

Now $\quad Y_C = \dfrac{2N_C \pm 2}{P} = \dfrac{Z \pm 2}{P} = Y_A \qquad (\because \; 2N_C = Z)$

$\therefore \quad$ Commutator pitch, $Y_C = Y_A = \dfrac{Y_B + Y_F}{2}$

In a simplex wave winding Y_B, Y_F and Y_C may be equal. Note that Y_B, Y_F and Y_B are in terms of armature conductors whereas Y_C is in terms of commutator segments.

1.15 Design of Simplex Wave Winding

In the design of simplex wave winding, the following points may be kept in mind:

(i) Both pitches Y_B and Y_F are odd and are of the same sign.

(ii) Average pitch, $Y_A = \dfrac{Z \pm 2}{P}$ (i)

(iii) Both Y_B and Y_F are nearly equal to pole pitch and may be equal or differ by 2. If they differ by 2, they are one more and one less than Y_A.

(iv) Commutator pitch is given by;

$$Y_C = Y_A = \frac{\text{Number of commutator segments} \pm 1}{\text{Number of pair of poles}}$$

The plus sign for progressive winding and negative for retrogressive winding.

(v) $Y_A = \dfrac{Z \pm 2}{P}$

Since Y_A must be a whole number, there is a restriction on the value of Z. With Z = 180, this winding is impossible for a 4-pole machine because Y_A is not a whole number.

(vi) $Z = P\,Y_A \pm 2$

$\therefore \quad$ Numnber of coils $= \dfrac{Z}{2} = \dfrac{PY_A \pm 2}{2}$

Developed diagram

Fig. (1.30) (i) shows the developed diagram for the winding. Note that full lines represent the top coil sides (or conductors) and dotted lines represent the bottom coil sides (or conductors). The two conductors which lie in the same slot are drawn nearer to each other than to those in the other slots.

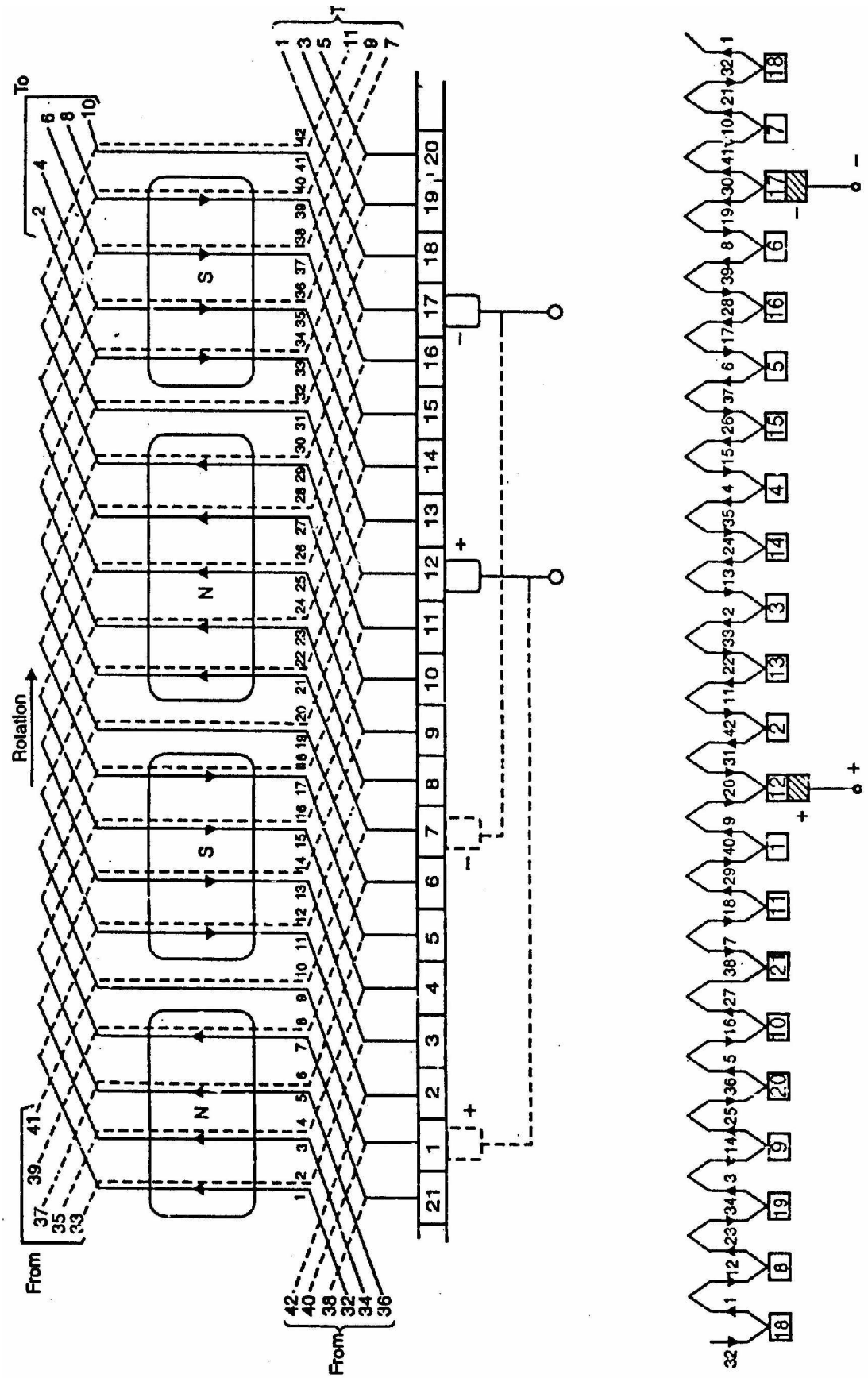

Fig. (1.30)

Referring to Fig. (1.30) (i), conductor 1 connects at the back to conductor 12(1 + 11) which in turn connects at the front to conductor 23 (12 + 11) and so on round the armature until the winding is complete. Note that the commutator pitch Y_C = 11 segments. This means that the number of commutator segments spanned between the start end and finish end of any coil is 11 segments.

Position and number of brushes

We now turn to find the position and the number of brushes. The arrowhead marked "rotation" in Fig. (1.30) (i) shows the direction of motion of the conductors. By right hand rule, the direction of e.m.f. in each conductor will be as shown.

In order to find the position of brushes, the ring diagram shown in Fig. (1.30) (ii) is quite helpful. It is clear that only two brushes—one positive and one negative—are required (though two positive and two negative brushes can also be used). We find that there are two parallel paths between the positive brush and the negative brush. Thus is illustrated in Fig. (1.31).

Therefore, we arrive at a very important conclusion that in a simplex wave winding, the number of parallel paths is two irrespective of the number of poles. Note that the first parallel path has 11 coils (or 22 conductors) while the second parallel path has 10 coils (or 20 conductors). This fact is not important as it may appear at first glance. The coils m the smaller group should supply less current to the external circuit. But the identity of the coils in either parallel path is rapidly changing from moment to moment. Therefore, the average value of current through any particular coil is the same.

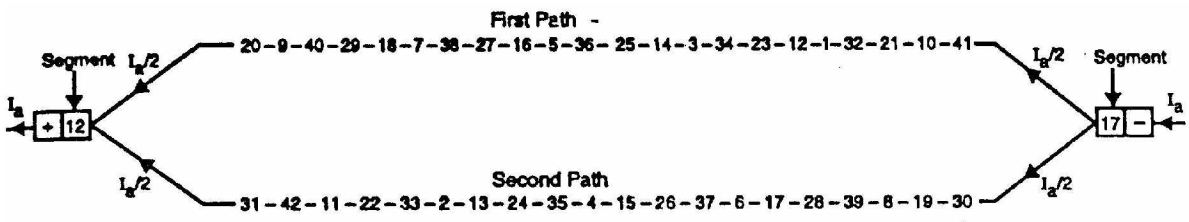

Fig. (1.31)

Conclusions

From the above discussion, the following conclusions can be drawn:

(i) Only two brushes are necessary but as many brushes as there are poles may be used.

(ii) The armature winding is divided into two parallel paths irrespective of the number of poles. If the total number of armature conductors is Z and P is the number of poles, then,

$$\text{Number of conductors/path} = \frac{Z}{2}$$

(iii) E.M.F. generated = E.M.F. per parallel path
= Average e.m.f. per conductor x —

(iv) Total armature current, $I_a = 2 \times$ current per parallel path

(v) The armature can be wave-wound if Y_A or Y_C is a whole number.

1.16 Dummy Coils

In a simplex wave winding, the average pitch Y_A (or commutator pitch Y_C) should be a whole number. Sometimes the standard armature punchings available in the market have slots that do not satisfy the above requirement so that more coils (usually only one more) are provided than can be utilized. These extra coils are called dummy or dead coils. The dummy coil is inserted into the slots in the same way as the others to make the armature dynamically balanced but it is not a part of the armature winding.

Let us illustrate the use of dummy coils with a numerical example. Suppose the number of slots is 22 and each slot contains 2 conductors. The number of poles is 4. For simplex wave wound armature,

$$Y_A = \frac{Z \pm 2}{P} = \frac{2 \times 22 \pm 2}{4} = \frac{44 \pm 2}{4} = 11\frac{1}{2} \text{ or } 10\frac{1}{2}$$

Since the results are not whole numbers, the number of coils (and hence segments) must be reduced. If we make one coil dummy, we have 42 conductors and

$$Y_A = \frac{42 \pm 2}{4} = 11 \text{ or } 10$$

This means that armature can be wound only if we use 21 coils and 21 segments. The extra coil or dummy coil is put in the slot. One end of this coil is taped and the other end connected to the unused commutator segment (segment 22) for the sake of appearance. Since only 21 segments are required, the two (21 and 22 segments) are connected together and considered as one.

1.17 Applications of Lap and Wave Windings

In multipolar machines, for a given number of poles (P) and armature conductors (Z), a wave winding has a higher terminal voltage than a lap winding because it has more conductors in series. On the other hand, the lap winding carries more current than a wave winding because it has more parallel paths.

In small machines, the current-carrying capacity of the armature conductors is not critical and in order to achieve suitable voltages, wave windings are used. On the other hand, in large machines suitable voltages are easily obtained because of the availability of large number of armature conductors and the current carrying capacity is more critical. Hence in large machines, lap windings are used.

Note: In general, a high-current armature is lap-wound to provide a large number of parallel paths and a low-current armature is wave-wound to provide a small number of parallel paths.

1.18 Multiplex Windings

A simplex lap-wound armature has as many parallel paths as the number of poles. A simplex wave-wound armature has two parallel paths irrespective of the number of poles. In case of a 10-pole machine, using simplex windings, the designer is restricted to either two parallel circuits (wave) or ten parallel circuits (lap). Sometimes it is desirable to increase the number of parallel paths. For this purpose, multiplex windings are used. The sole purpose of multiplex windings is to increase the number of parallel paths enabling the armature to carry a large total current. The degree of multiplicity or plex determines the number of parallel paths in the following manner:

(i) A lap winding has pole times the degree of plex parallel paths.

Number of parallel paths, $A = P \times \text{plex}$

Thus a duplex lap winding has 2P parallel paths, triplex lap winding has 3P parallel paths and so on. If an armature is changed from simplex lap to duplex lap without making any other change, the number of parallel paths is doubled and each path has half as many coils. The armature will then supply twice as much current at half the voltage.

(ii) A wave winding has two times the degree of plex parallel paths.

Number of parallel paths, $A = 2 \times \text{plex}$

Note that the number of parallel paths in a multiplex wave winding depends upon the degree of plex and not on the number of poles. Thus a duplex wave winding has 4 parallel paths, triplex wave winding has 6 parallel paths and so on.

1.19 Function of Commutator and Brushes

The e.m.f. generated in the armature winding of a d.c. generator is alternating one. The commutator and brushes cause the alternating e.m.f. of the armature conductors to produce a p.d. always in the same direction between the terminals of the generator. In lap as well as wave winding, it will be observed that currents

in the coils to a brush are either all directed towards the brush (positive brush) or all directed away from the brush (negative brush). Further, the direction of current in coil reverses as it passes the brush. Thus when the coil approaches the contact with the brush, the current through the coil is in one direction; when the coil leaves the contact with the brush, the current has been reversed. This reversal of current in the coil as the coil passes a brush is called commutation and fakes place while the coil is short-circuited by the brush. These changes occur in every coil in turn. If, at the instant when the brush breaks contact with the commutator segment connected to the coil undergoing commutation, the current in the coil has not been reversed, the result will be sparking between the commutator segments and the brush.

The criterion of good commutation is that it should be sparkless. In order to have sparkless commutation, the brushes on the commutator should be placed at points known as neutral point where no voltage exists between adjacent segments. The conductors connected to these segments lie between the poles in position of zero magnetic flux which is termed as magnetic neutral axis (M.N.A)

1.20 E.M.F. Equation of a D.C. Generator

We shall now derive an expression for the e.m.f. generated in a d.c. generator.

Let ϕ = flux/pole in Wb

Z = total number of armature conductors

P = number of poles

A = number of parallel paths = 2 ... for wave winding

= P ... for lap winding

N = speed of armature in r.p.m.

E_g = e.m.f. of the generator = e.m.f./parallel path

Flux cut by one conductor in one revolution of the armature,

$d\phi = P\phi$ webers

Time taken to complete one revolution,

$dt = 60/N$ second

e.m.f generated/conductor $= \dfrac{d\phi}{dt} = \dfrac{P\phi}{60/N} = \dfrac{P\phi N}{60}$ volts

e.m.f. of generator,

E_g = e.m.f. per parallel path

= (e.m.f/conductor) $\times$ No. of conductors in series per parallel path

$$= \frac{P\phi\, N}{60} \times \frac{Z}{A}$$

$$\therefore \quad E_g = \frac{P\phi\, ZN}{60\, A}$$

where $A = 2$ for-wave winding

$= P$ for lap winding

1.21 Armature Resistance (R_a)

The resistance offered by the armature circuit is known as armature resistance (R_a) and includes:

(i) resistance of armature winding
(ii) resistance of brushes

The armature resistance depends upon the construction of machine. Except for small machines, its value is generally less than 1Ω.

1.22 Types of D.C. Generators

The magnetic field in a d.c. generator is normally produced by electromagnets rather than permanent magnets. Generators are generally classified according to their methods of field excitation. On this basis, d.c. generators are divided into the following two classes:

(i) Separately excited d.c. generators
(ii) Self-excited d.c. generators

The behaviour of a d.c. generator on load depends upon the method of field excitation adopted.

1.23 Separately Excited D.C. Generators

A d.c. generator whose field magnet winding is supplied from an independent external d.c. source (e.g., a battery etc.) is called a separately excited generator. Fig. (1.32) shows the connections of a separately excited generator. The voltage output depends upon the speed of rotation of armature and the field current ($E_g = P\phi\ ZN/60\ A$). The greater the speed and field current, greater is the generated e.m.f. It may be noted that separately excited d.c. generators are rarely used in practice. The d.c. generators are normally of self-excited type.

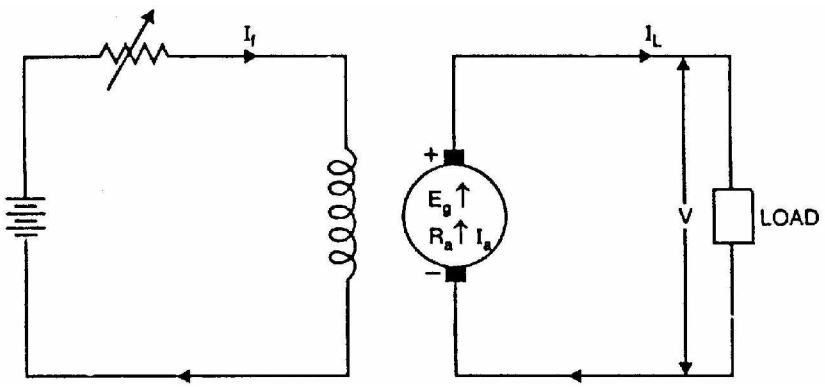

Fig. (1.32)

Armature current, $I_a = I_L$
Terminal voltage, $V = E_g - I_aR_a$
Electric power developed = E_gI_a
Power delivered to load = $E_gI_a - I_a^2R_a = I_a(E_g - I_aR_a) = VI_a$

1.24 Self-Excited D.C. Generators

A d.c. generator whose field magnet winding is supplied current from the output of the generator itself is called a self-excited generator. There are three types of self-excited generators depending upon the manner in which the field winding is connected to the armature, namely;

(i) Series generator;
(ii) Shunt generator;
(iii) Compound generator

(i) Series generator

In a series wound generator, the field winding is connected in series with armature winding so that whole armature current flows through the field winding as well as the load. Fig. (1.33) shows the connections of a series wound generator. Since the field winding carries the whole of load current, it has a few turns of thick wire having low resistance. Series generators are rarely used except for special purposes e.g., as boosters.

Armature current, $I_a = I_{se} = I_L = I$(say)
Terminal voltage, $V = E_G - I(R_a + R_{se})$
Power developed in armature = E_gI_a
Power delivered to load

$$= E_gI_a - I_a^2(R_a + R_{se}) = I_a[E_g - I_a(R_a - R_{se})] = VI_a \text{ or } VI_L$$

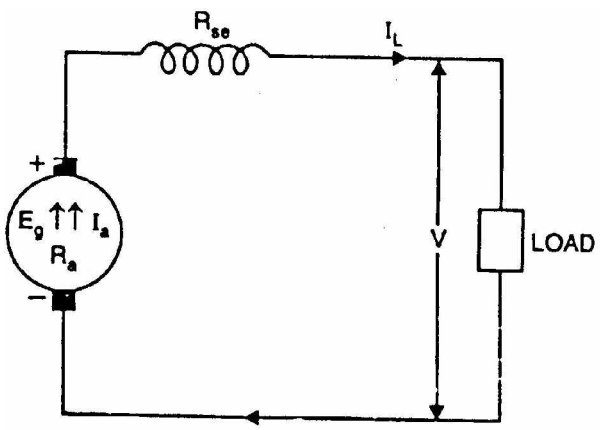

Fig. (1.33)

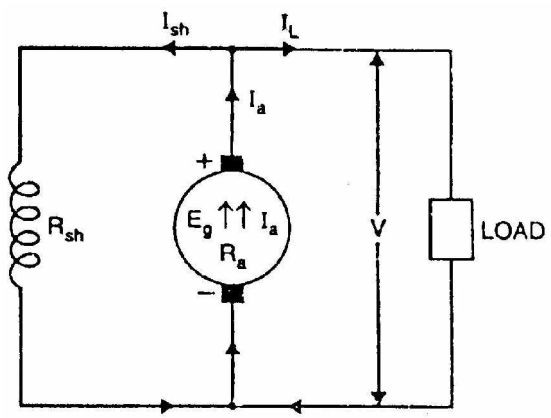

Fig. (1.34)

(ii) Shunt generator

In a shunt generator, the field winding is connected in parallel with the armature winding so that terminal voltage of the generator is applied across it. The shunt field winding has many turns of fine wire having high resistance. Therefore, only a part of armature current flows through shunt field winding and the rest flows through the load. Fig. (1.34) shows the connections of a shunt-wound generator.

Shunt field current, $I_{sh} = V/R_{sh}$
Armature current, $I_a = I_L + I_{sh}$
Terminal voltage, $V = E_g - I_aR_a$
Power developed in armature = E_gI_a
Power delivered to load = VI_L

(iii) Compound generator

In a compound-wound generator, there are two sets of field windings on each pole—one is in series and the other in parallel with the armature. A compound wound generator may be:

(a) Short Shunt in which only shunt field winding is in parallel with the armature winding [See Fig. 1.35 (i)].
(b) Long Shunt in which shunt field winding is in parallel with both series field and armature winding [See Fig. 1.35 (ii)].

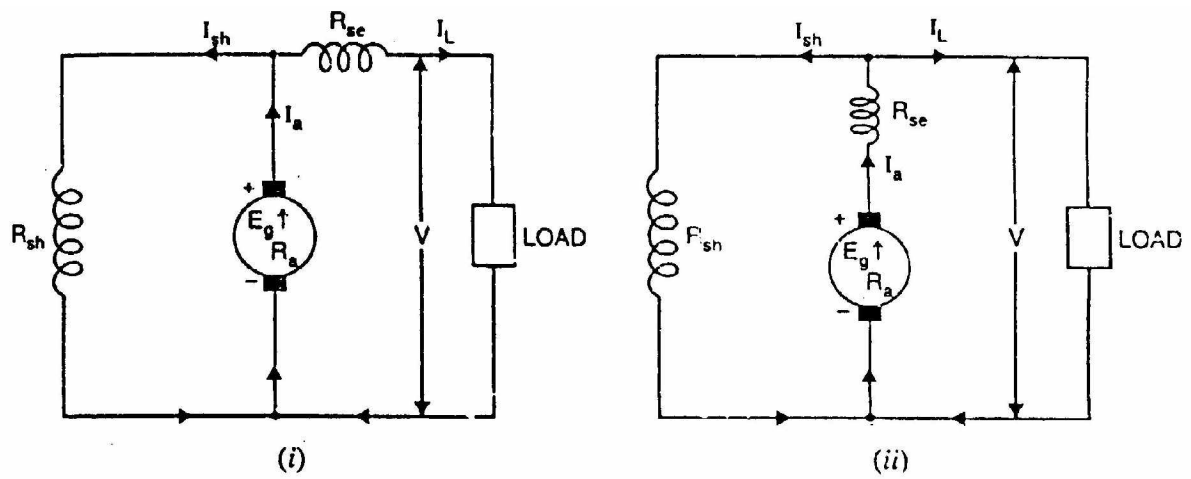

Fig. (1.35)

Short shunt

Series field current, $I_{se} = I_L$

Shunt field current, $I_{sh} = \dfrac{V + I_{se}R_{se}}{R_{sh}}$

Terminal voltage, $V = E_g - I_aR_a - I_{se}R_{se}$
Power developed in armature = E_gI_a
Power delivered to load = VI_L

Long shunt

Series field current, $I_{se} = I_a = I_L + I_{sh}$

Shunt field current, $I_{sh} = V/R_{sh}$

Terminal voltage, $V = E_g - I_a(R_a + R_{se})$

Power developed in armature = $E_g I_a$

Power delivered to load = VI_L

1.25 Brush Contact Drop

It is the voltage drop over the brush contact resistance when current flows. Obviously, its value will depend upon the amount of current flowing and the value of contact resistance. This drop is generally small.

1.26 Losses in a D.C. Machine

The losses in a d.c. machine (generator or motor) may be divided into three classes viz (i) copper losses (ii) iron or core losses and (iii) mechanical losses. All these losses appear as heat and thus raise the temperature of the machine. They also lower the efficiency of the machine.

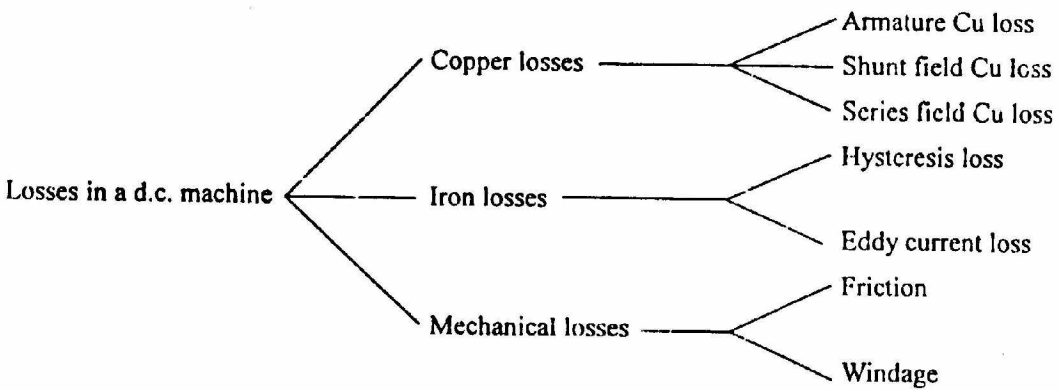

1. Copper losses

These losses occur due to currents in the various windings of the machine.

(i) Armature copper loss = $I_a^2 R_a$

(ii) Shunt field copper loss = $I_{sh}^2 R_{sh}$

(iii) Series field copper loss = $I_{se}^2 R_{se}$

Note. There is also brush contact loss due to brush contact resistance (i.e., resistance between the surface of brush and surface of commutator). This loss is generally included in armature copper loss.

2. Iron or Core losses

These losses occur in the armature of a d.c. machine and are due to the rotation of armature in the magnetic field of the poles. They are of two types viz., (i) hysteresis loss (ii) eddy current loss.

(i) **Hysteresis loss**

Hysteresis loss occurs in the armature of the d.c. machine since any given part of the armature is subjected to magnetic field reversals as it passes under successive poles. Fig. (1.36) shows an armature rotating in two-pole machine. Consider a small piece ab of the armature. When the piece ab is under N-pole, the magnetic lines pass from a to b. Half a revolution later, the same piece of iron is under S-pole and magnetic lines pass from b to a so that magnetism in the iron is reversed. In order to reverse continuously the molecular magnets in the armature core, some amount of power has to be spent which is called hysteresis loss. It is given by Steinmetz formula. This formula is

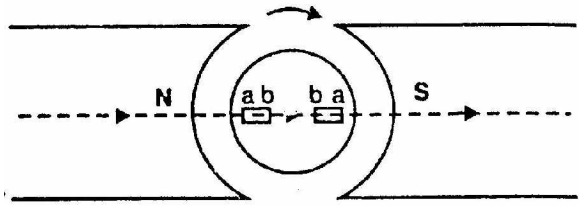

Fig. (1.36)

$$\text{Hysteresis loss, } P_h = \eta B_{max}^{16} f V \quad \text{watts}$$

where B_{max} = Maximum flux density in armature
f = Frequency of magnetic reversals
= NP/120 where N is in r.p.m.
V = Volume of armature in m^3
η = Steinmetz hysteresis co-efficient

In order to reduce this loss in a d.c. machine, armature core is made of such materials which have a low value of Steinmetz hysteresis co-efficient e.g., silicon steel.

(ii) **Eddy current loss**

In addition to the voltages induced in the armature conductors, there are also voltages induced in the armature core. These voltages produce circulating currents in the armature core as shown in Fig. (1.37). These are called eddy currents and power loss due to their flow is called eddy current loss. The eddy current loss appears as heat which raises the temperature of the machine and lowers its efficiency.

If a continuous solid iron core is used, the resistance to eddy current path will be small due to large cross-sectional area of the core. Consequently, the magnitude of eddy current and hence eddy current loss will be large. The magnitude of eddy current can be reduced by making core resistance as high as practical. The

core resistance can be greatly increased by constructing the core of thin, round iron sheets called laminations [See Fig. 1.38]. The laminations are insulated from each other with a coating of varnish. The insulating coating has a high resistance, so very little current flows from one lamination to the other. Also, because each lamination is very thin, the resistance to current flowing through the width of a lamination is also quite large. Thus laminating a core increases the core resistance which decreases the eddy current and hence the eddy current loss.

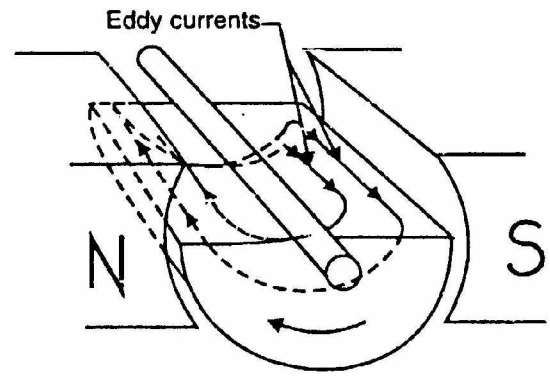

Fig. (1.37)

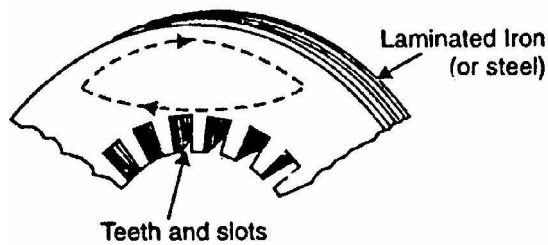

Fig. (1.38)

$$\text{Eddy current loss, } P_e = K_e B_{max}^2 f^2 t^2 V \quad \text{watts}$$

where K_e = Constant depending upon the electrical resistance of core and system of units used

B_{max} = Maximum flux density in Wb/m2

f = Frequency of magnetic reversals in Hz

t = Thickness of lamination in m

V = Volume of core in m^3

It may be noted that eddy current loss depends upon the square of lamination thickness. For this reason, lamination thickness should be kept as small as possible.

3. Mechanical losses

These losses are due to friction and windage.

(i) friction loss e.g., bearing friction, brush friction etc.

(ii) windage loss i.e., air friction of rotating armature.

These losses depend upon the speed of the machine. But for a given speed, they are practically constant.

Note. Iron losses and mechanical losses together are called stray losses.

1.27 Constant and Variable Losses

The losses in a d.c. generator (or d.c. motor) may be sub-divided into (i) constant losses (ii) variable losses.

(i) **Constant losses**

Those losses in a d.c. generator which remain constant at all loads are known as constant losses. The constant losses in a d.c. generator are:

(a) iron losses
(b) mechanical losses
(c) shunt field losses

(ii) Variable losses

Those losses in a d.c. generator which vary with load are called variable losses. The variable losses in a d.c. generator are:

(a) Copper loss in armature winding ($I_a^2 R_a$)

(b) Copper loss in series field winding ($I_{se}^2 R_{se}$)

Total losses = Constant losses + Variable losses

Note. Field Cu loss is constant for shunt and compound generators.

1.28 Power Stages

The various power stages in a d.c. generator are represented diagrammatically in Fig. (1.39).

A – B = Iron and friction losses

B – C = Copper losses

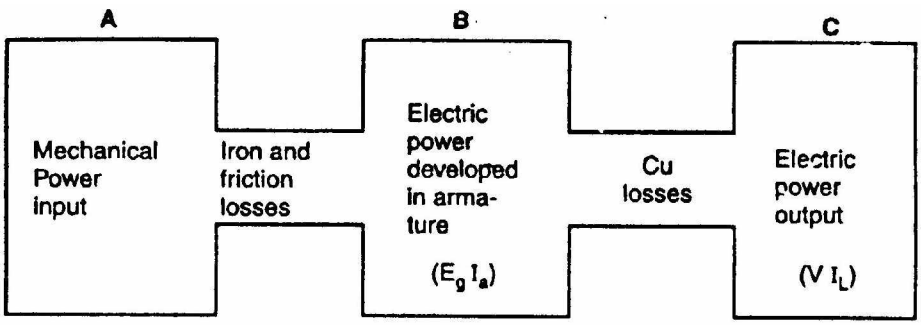

Fig. (1.39)

(i) Mechanical efficiency

$$\eta_m = \frac{B}{A} = \frac{E_g I_a}{\text{Mechanical power input}}$$

(ii) Electrical efficiency

$$\eta_e = \frac{C}{B} = \frac{V\,I_L}{E_g\,I_a}$$

(iii) Commercial or overall efficiency

$$\eta_c = \frac{C}{A} = \frac{V\,I_L}{\text{Mechanical power input}}$$

Clearly $\eta_c = \eta_m \times \eta_e$

Unless otherwise stated, commercial efficiency is always understood.

Now, commercial efficiency, $\eta_c = \frac{C}{A} = \frac{\text{output}}{\text{input}} = \frac{\text{input} - \text{losses}}{\text{input}}$

1.29 Condition for Maximum Efficiency

The efficiency of a d.c. generator is not constant but varies with load. Consider a shunt generator delivering a load current I_L at a terminal voltage V.

Generator output $= V\,I_L$

Generator input = Output + Losses

$= V\,I_L$ + Variable losses + Constant losses

$= VI_L + I_a^2 R_a + W_C$

$= VI_L + (I_L + I_{sh})^2 R_a + W_C$ $\quad [\because I_a + I_L + I_{sh}]$

The shunt field current I_{sh} is generally small as compared to I_L and, therefore, can be neglected.

$\therefore$ Generator input = $VI_L + I_L^2 R_a + W_C$

Now $$\eta = \frac{\text{output}}{\text{input}} = \frac{VI_L}{VI_L + I_L^2 R_a + W_C}$$

$$= \frac{1}{1 + \left(\frac{I_L R_a}{V} + \frac{W_C}{VI_L}\right)} \qquad \text{(i)}$$

The efficiency will be maximum when the denominator of Eq.(i) is minimum i.e.,

$$\frac{d}{dI_L}\left(\frac{I_L R_a}{V} + \frac{W_C}{VI_L}\right) = 0$$

or $$\frac{R_a}{V} - \frac{W_C}{VI_L^2} = 0$$

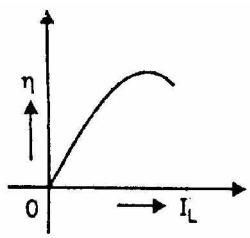

Fig. (1.40)

or $$\frac{R_a}{V} = \frac{W_C}{VI_L^2}$$

or $$I_L^2 R_a = W_C$$

i.e. Variable loss = Constant loss $\left(\because\ I_L \simeq I_a\right)$

The load current corresponding to maximum efficiency is given by;

$$I_L = \sqrt{\frac{W_C}{R_a}}$$

Hence, the efficiency of a d.c. generator will be maximum when the load current is such that variable loss is equal to the constant loss. Fig (1.40) shows the variation of η with load current.

Chapter (2)

Armature Reaction and Commutation

Introduction

In a d.c. generator, the purpose of field winding is to produce magnetic field (called main flux) whereas the purpose of armature winding is to carry armature current. Although the armature winding is not provided for the purpose of producing a magnetic field, nevertheless the current in the armature winding will also produce magnetic flux (called armature flux). The armature flux distorts and weakens the main flux posing problems for the proper operation of the d.c. generator. The action of armature flux on the main flux is called armature reaction.

In the previous chapter (Sec 1.19), it was hinted that current in the coil is reversed as the coil passes a brush. This phenomenon is termed as commutation. The criterion for good commutation is that it should be sparkless. In order to have sparkless commutation, the brushes should lie along magnetic neutral axis. In this chapter, we shall discuss the various aspects of armature reaction and commutation in a d.c. generator.

2.1 Armature Reaction

So far we have assumed that the only flux acting in a d.c. machine is that due to the main poles called main flux. However, current flowing through armature conductors also creates a magnetic flux (called armature flux) that distorts and weakens the flux coming from the poles. This distortion and field weakening takes place in both generators and motors. The action of armature flux on the main flux is known as armature reaction.

The phenomenon of armature reaction in a d.c. generator is shown in Fig. (2.1). Only one pole is shown for clarity. When the generator is on no-load, a smal1 current flowing in the armature does not appreciably affect the main flux ϕ_1 coming from the pole [See Fig 2.1 (i)]. When the generator is loaded, the current flowing through armature conductors sets up flux ϕ_1. Fig. (2.1) (ii) shows flux due to armature current alone. By superimposing ϕ_1 and ϕ_2, we obtain the resulting flux ϕ_3 as shown in Fig. (2.1) (iii). Referring to Fig (2.1) (iii), it is clear that flux density at; the trailing pole tip (point B) is increased while at the

leading pole tip (point A) it is decreased. This unequal field distribution produces the following two effects:

(i) The main flux is distorted.

(ii) Due to higher flux density at pole tip B, saturation sets in. Consequently, the increase in flux at pole tip B is less than the decrease in flux under pole tip A. Flux ϕ_3 at full load is, therefore, less than flux ϕ_1 at no load. As we shall see, the weakening of flux due to armature reaction depends upon the position of brushes.

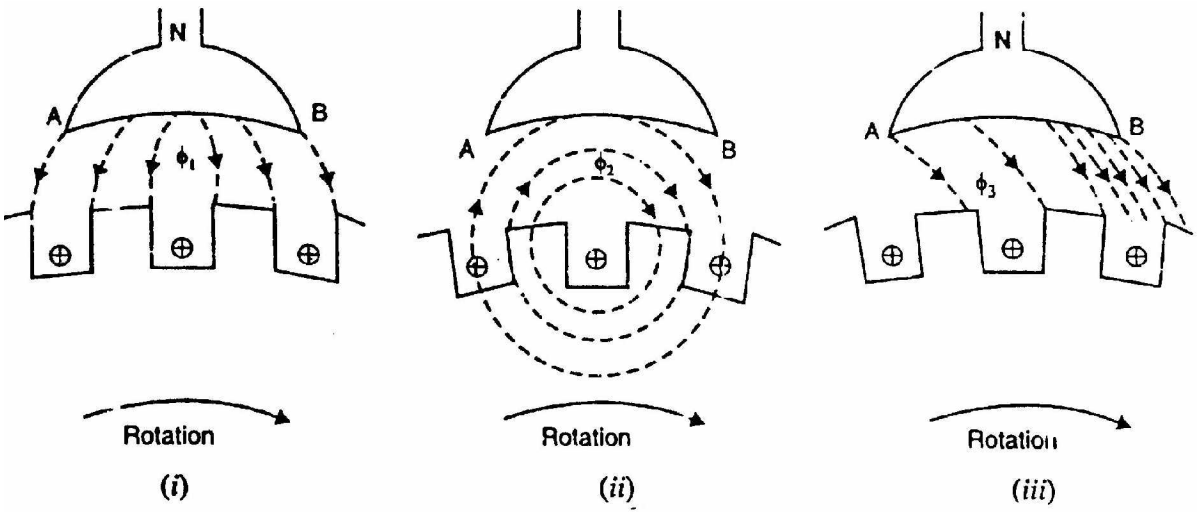

Fig. (2.1)

2.2 Geometrical and Magnetic Neutral Axes

(i) The geometrical neutral axis (G.N.A.) is the axis that bisects the angle between the centre line of adjacent poles [See Fig. 2.2 (i)]. Clearly, it is the axis of symmetry between two adjacent poles.

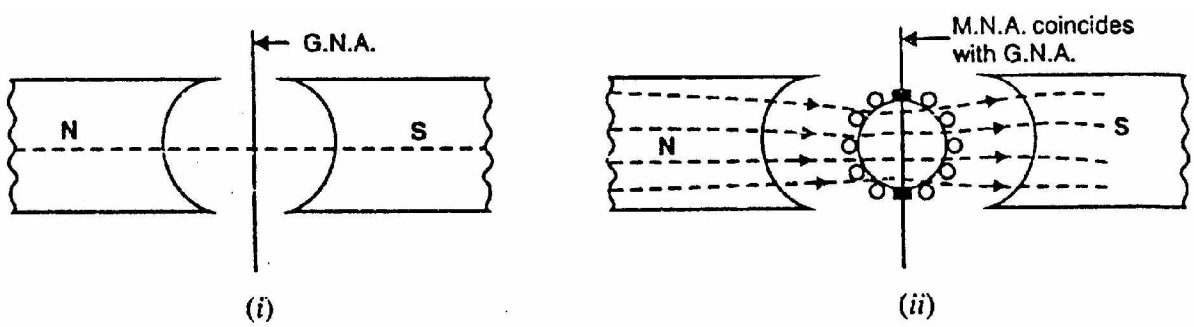

Fig. (2.1)

(ii) The magnetic neutral axis (M. N. A.) is the axis drawn perpendicular to the mean direction of the flux passing through the centre of the armature. Clearly, no e.m.f. is produced in the armature conductors along this axis because then they cut no flux. With no current in the armature conductors, the M.N.A. coincides with G, N. A. as shown in Fig. (2.2).

(ii). In order to achieve sparkless commutation, the brushes must lie along M.N.A.

2.3 Explanation of Armature Reaction

With no current in armature conductors, the M.N.A. coincides with G.N.A. However, when current flows in armature conductors, the combined action of main flux and armature flux shifts the M.N.A. from G.N.A. In case of a generator, the M.N.A. is shifted in the direction of rotation of the machine. In order to achieve sparkless commutation, the brushes have to be moved along the new M.N.A. Under such a condition, the armature reaction produces the following two effects:

1. It demagnetizes or weakens the main flux.
2. It cross-magnetizes or distorts the main flux.

Let us discuss these effects of armature reaction by considering a 2-pole generator (though the following remarks also hold good for a multipolar generator).

(i) Fig. (2.3) (i) shows the flux due to main poles (main flux) when the armature conductors carry no current. The flux across the air gap is uniform. The m.m.f. producing the main flux is represented in magnitude and direction by the vector OF_m in Fig. (2.3) (i). Note that OF_m is perpendicular to G.N.A.

(ii) Fig. (2.3) (ii) shows the flux due to current flowing in armature conductors alone (main poles unexcited). The armature conductors to the left of G.N.A. carry current "in" (×) and those to the right carry current "out" (•). The direction of magnetic lines of force can be found by cork screw rule. It is clear that armature flux is directed downward parallel to the brush axis. The m.m.f. producing the armature flux is represented in magnitude and direction by the vector OF_A in Fig. (2.3) (ii).

(iii) Fig. (2.3) (iii) shows the flux due to the main poles and that due to current in armature conductors acting together. The resultant m.m.f. OF is the vector sum of OF_m and OF_A as shown in Fig. (2.3) (iii). Since M.N.A. is always perpendicular to the resultant m.m.f., the M.N.A. is shifted through an angle θ. Note that M.N.A. is shifted in the direction of rotation of the generator.

(iv) In order to achieve sparkless commutation, the brushes must lie along the M.N.A. Consequently, the brushes are shifted through an angle θ so as to lie along the new M.N.A. as shown in Fig. (2.3) (iv). Due to brush shift, the m.m.f. F_A of the armature is also rotated through the same angle θ. It is because some of the conductors which were earlier under N-pole now come under S-pole and vice-versa. The result is that armature m.m.f. F_A will no longer be vertically downward but will be

rotated in the direction of rotation through an angle θ as shown in Fig. (2.3) (iv). Now F_A can be resolved into rectangular components F_c and F_d.

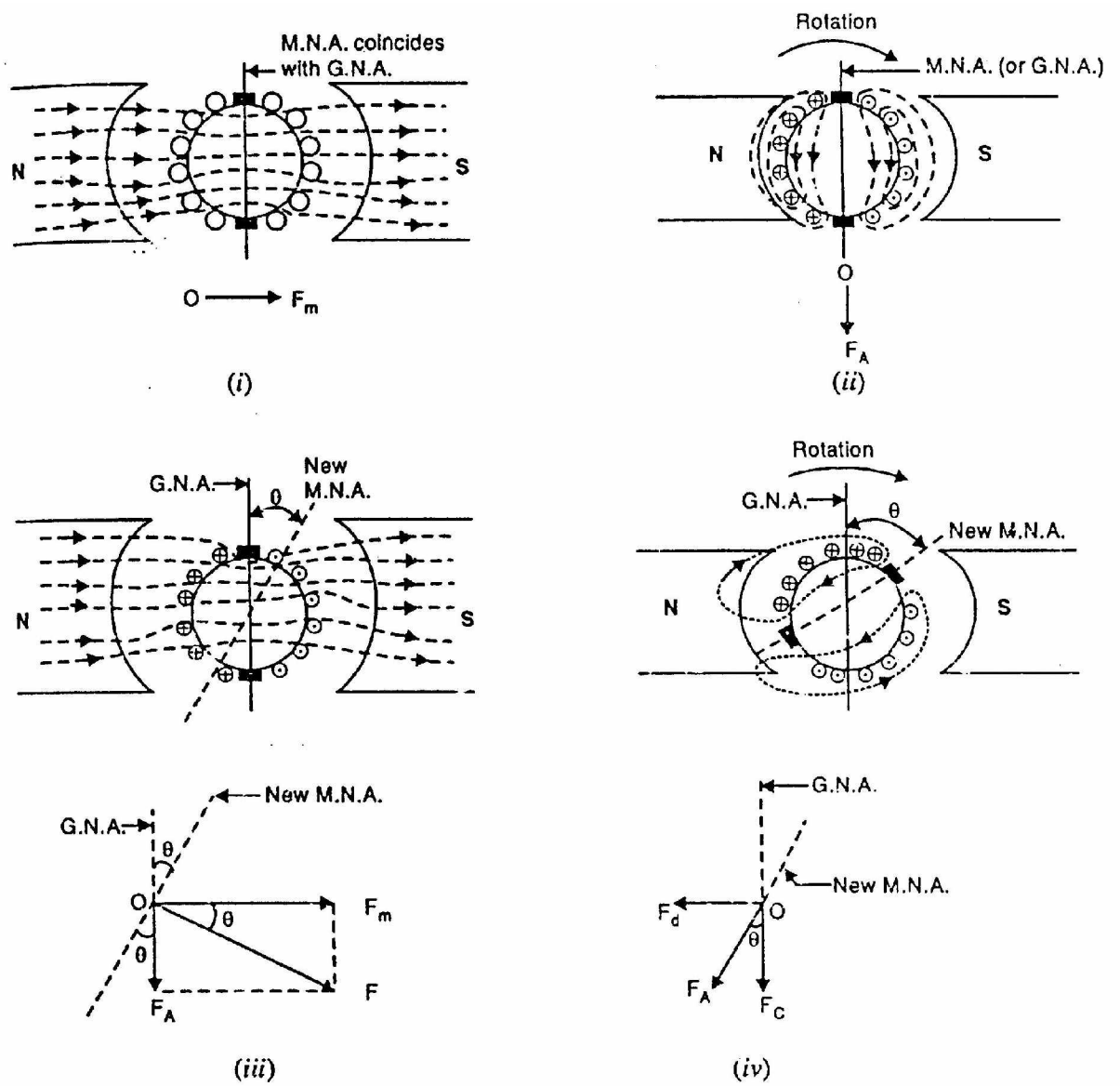

Fig. (2.3)

(a) The component F_d is in direct opposition to the m.m.f. OF_m due to main poles. It has a demagnetizing effect on the flux due to main poles. For this reason, it is called the demagnetizing or weakening component of armature reaction.

(b) The component F_c is at right angles to the m.m.f. OF_m due to main poles. It distorts the main field. For this reason, it is called the cross-magnetizing or distorting component of armature reaction.

It may be noted that with the increase of armature current, both demagnetizing and distorting effects will increase.

Conclusions

(i) With brushes located along G.N.A. (i.e., $\theta = 0°$), there is no demagnetizing component of armature reaction ($F_d = 0$). There is only distorting or cross-magnetizing effect of armature reaction.

(ii) With the brushes shifted from G.N.A., armature reaction will have both demagnetizing and distorting effects. Their relative magnitudes depend on the amount of shift. This shift is directly proportional to the armature current.

(iii) The demagnetizing component of armature reaction weakens the main flux. On the other hand, the distorting component of armature reaction distorts the main flux.

(iv) The demagnetizing effect leads to reduced generated voltage while cross-magnetizing effect leads to sparking at the brushes.

2.4 Demagnetizing and Cross-Magnetizing Conductors

With the brushes in the G.N.A. position, there is only cross-magnetizing effect of armature reaction. However, when the brushes are shifted from the G.N.A. position, the armature reaction will have both demagnetizing and cross-magnetizing effects. Consider a 2-pole generator with brushes shifted (lead) θ_m mechanical degrees from G.N.A. We shall identify the armature conductors that produce demagnetizing effect and those that produce cross-magnetizing effect.

(i) The armature conductors θ_m^- on either side of G.N.A. produce flux in direct opposition to main flux as shown in Fig. (2.4) (i). Thus the conductors lying within angles AOC = BOD = $2\theta_m$ at the top and bottom of the armature produce demagnetizing effect. These are called demagnetizing armature conductors and constitute the demagnetizing ampere-turns of armature reaction (Remember two conductors constitute a turn).

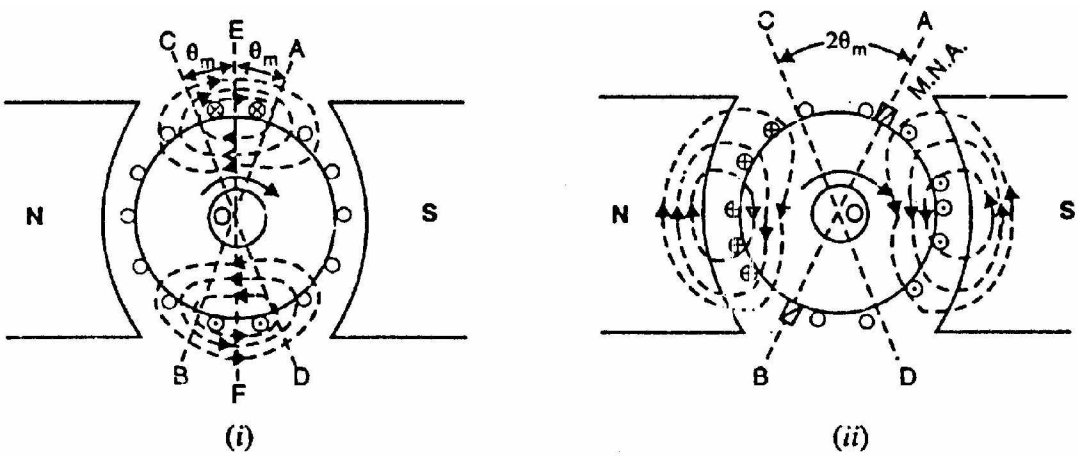

Fig.(2.4)

(ii) The axis of magnetization of the remaining armature conductors lying between angles AOD and COB is at right angles to the main flux as shown in Fig. (2.4) (ii). These conductors produce the cross-magnetizing (or distorting) effect i.e., they produce uneven flux distribution on each pole. Therefore, they are called cross-magnetizing conductors and constitute the cross-magnetizing ampere-turns of armature reaction.

2.5 Calculation of Demagnetizing Ampere-Turns Per Pole (AT_d/Pole)

It is sometimes desirable to neutralize the demagnetizing ampere-turns of armature reaction. This is achieved by adding extra ampere-turns to the main field winding. We shall now calculate the demagnetizing ampere-turns per pole (AT_d/pole).

Let Z = total number of armature conductors

I = current in each armature conductor

= $I_a/2$ ... for simplex wave winding

= I_a/P ... for simplex lap winding

θ_m = forward lead in mechanical degrees

Referring to Fig. (2.4) (i) above, we have,

Total demagnetizing armature conductors

$$= \text{Conductors in angles AOC and BOD} = \frac{4\theta_m}{360} \times Z$$

Since two conductors constitute one turn,

$$\therefore \quad \text{Total demagnetizing ampere-turns} = \frac{1}{2}\left[\frac{4\theta_m}{360} \times Z\right] \times I = \frac{2\theta_m}{360} \times ZI$$

These demagnetizing ampere-turns are due to a pair of poles.

$$\therefore \quad \text{Demagnetizing ampere-turns/pole} = \frac{\theta_m}{360} \times ZI$$

i.e., $$AT_d / \text{pole} = \frac{\theta_m}{360} \times ZI$$

As mentioned above, the demagnetizing ampere-turns of armature reaction can be neutralized by putting extra turns on each pole of the generator.

$$\therefore \quad \text{No. of extra turns/pole} = \frac{AT_d}{I_{sh}} \qquad \text{for a shunt generator}$$

$$= \frac{AT_d}{I_a} \qquad \text{for a series generator}$$

Note. When a conductor passes a pair of poles, one cycle of voltage is generated. We say one cycle contains 360 electrical degrees. Suppose there are P

poles in a generator. In one revolution, there are 360 mechanical degrees and $360 \times P/2$ electrical degrees.

$$\therefore \quad 360° \text{ mechanical} = 360 \times \frac{P}{2} \text{ electrical degrees}$$

or $$1° \text{ Mechanical} = \frac{P}{2} \text{ electrical degrees}$$

$$\therefore \quad \theta \text{ (mechanical)} = \frac{\theta(\text{electrical})}{\text{Pair of pols}}$$

or $$\theta_m = \frac{\theta_e}{P/2} \qquad \therefore \quad \theta_m = \frac{2\theta_e}{P}$$

2.6 Cross-Magnetizing Ampere-Turns Per Pole (AT_c/Pole)

We now calculate the cross-magnetizing ampere-turns per pole (AT_c/pole).

Total armature reaction ampere-turns per pole

$$= \frac{Z/2}{P} \times I = \frac{Z}{2P} \times I \qquad (\text{n} \quad \text{two conductors make one turn})$$

Demagnetizing ampere-turns per pole is given by;

$$AT_d / \text{pole} = \frac{\theta_m}{360} \times ZI$$

(found above)

$\therefore$ Cross-magnetizing ampere-turns/pole are

$$AT_d / pole = \frac{Z}{2P} \times I - \frac{\theta_m}{360} \times ZI = ZI\left(\frac{1}{2P} - \frac{\theta_m}{360}\right)$$

$$\therefore \quad AT_d / pole = ZI\left(\frac{1}{2P} - \frac{\theta_m}{360}\right)$$

2.7 Compensating Windings

The cross-magnetizing effect of armature reaction may cause trouble in d.c. machines subjected to large fluctuations in load. In order to neutralize the cross-magnetizing effect of armature reaction, a compensating winding is used.

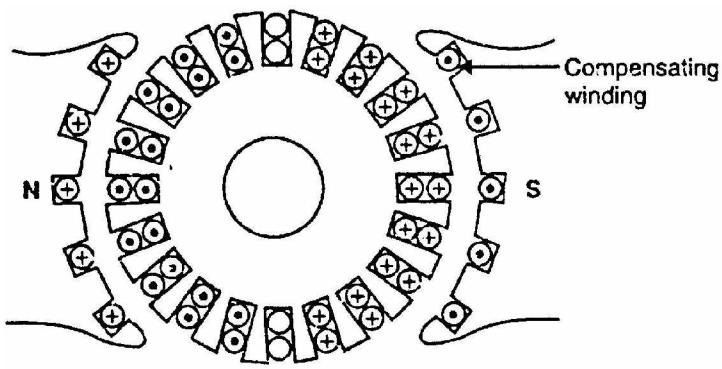

Fig. (2.5)

A compensating winding is an auxiliary winding embedded in slots in the pole faces as shown in Fig. (2.5). It is connected in series with armature in a manner so that the direction of current through the compensating conductors in any one pole face will be opposite to the direction of the current through the adjacent armature conductors [See Fig. 2.5]. Let us now calculate the number of compensating conductors/ pole face. In calculating the conductors per pole face required for the compensating winding, it should be remembered that the current in the compensating conductors is the armature current I_a whereas the current in armature conductors is I_a/A where A is the number of parallel paths.

Let Z_c = No. of compensating conductors/pole face

Z_a = No. of active armature conductors

I_a = Total armature current

I_a/A = Current in each armature conductor

$$\therefore \quad Z_c I_a = Z_a \times \frac{I_a}{A}$$

or $$Z_c = \frac{Z_a}{A}$$

The use of a compensating winding considerably increases the cost of a machine and is justified only for machines intended for severe service e.g., for high speed and high voltage machines.

2.8 AT/Pole for Compensating Winding

Only the cross-magnetizing ampere-turns produced by conductors under the pole face are effective in producing the distortion in the pole cores. If Z is the total number of armature conductors and P is the number of poles, then,

$$\text{No. of armature conductors/pole} = \frac{Z}{P}$$

$$\text{No. of armature turns/pole} = \frac{Z}{2P}$$

$$\text{No. of armature turns under pole face} = \frac{Z}{2P} \times \frac{\text{Pole arc}}{\text{Pole pitch}}$$

If I is the current through each armature conductor, then,

$$\text{AT/pole required for compensating winding} = \frac{ZI}{2P} \times \frac{\text{Pole arc}}{\text{Pole pitch}}$$

$$= \text{Armature AT/pole} \times \frac{\text{Pole arc}}{\text{Pole pitch}}$$

2.9 Commutation

Fig. (2.6) shows the schematic diagram of 2-pole lap-wound generator. There are two parallel paths between the brushes. Therefore, each coil of the winding carries one half ($I_a/2$ in this case) of the total current (I_a) entering or leaving the armature.

Note that the currents in the coils connected to a brush are either all towards the brush (positive brush) or all directed away from the brush (negative brush). Therefore, current in a coil will reverse as the coil passes a brush. This reversal of current as the coil passes & brush is called commutation.

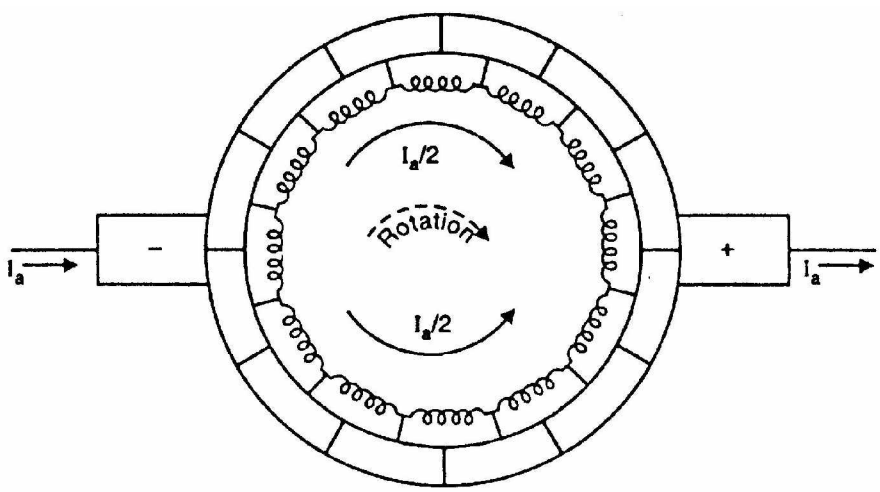

Fig. (2.6)

The reversal of current in a coil as the coil passes the brush axis is called commutation.

When commutation takes place, the coil undergoing commutation is short-circuited by the brush. The brief period during which the coil remains short-circuited is known as commutation period T_c. If the current reversal is completed by the end of commutation period, it is called ideal commutation. If the current reversal is not completed by that time, then sparking occurs between the brush and the commutator which results in progressive damage to both.

Ideal commutation

Let us discuss the phenomenon of ideal commutation (i.e., coil has no inductance) in one coil in the armature winding shown in Fig. (2.6) above. For this purpose, we consider the coil A. The brush width is equal to the width of one commutator segment and one mica insulation. Suppose the total armature current is 40 A. Since there are two parallel paths, each coil carries a current of 20 A.

(i) In Fig. (2.7) (i), the brush is in contact with segment 1 of the commutator. The commutator segment 1 conducts a current of 40 A to the brush; 20 A from coil A and 20 A from the adjacent coil as shown. The coil A has yet to undergo commutation.

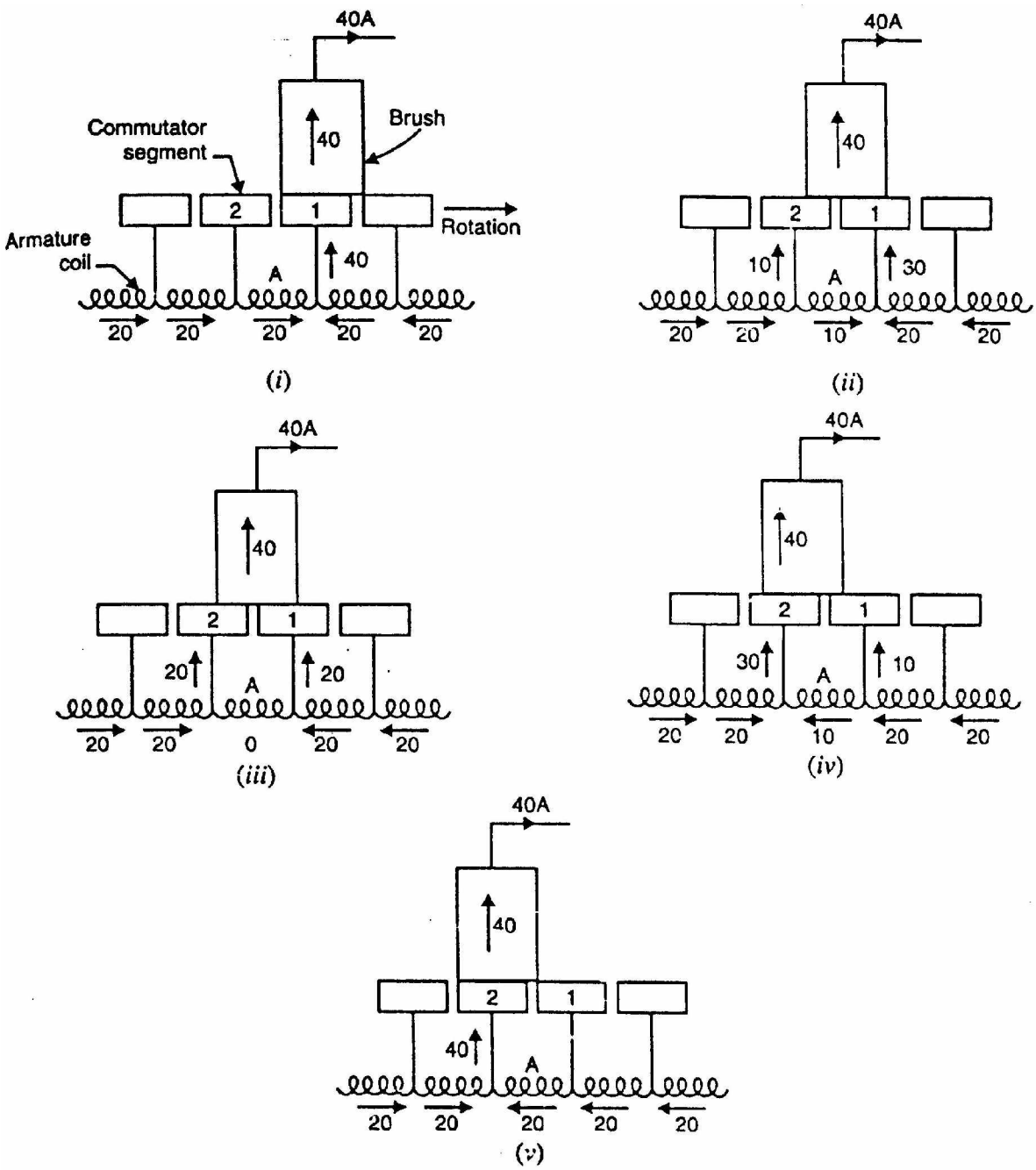

Fig. (2.7)

(ii) As the armature rotates, the brush will make contact with segment 2 and thus short-circuits the coil A as shown in Fig. (2.7) (ii). There are now two parallel paths into the brush as long as the short-circuit of coil A exists. Fig. (2.7) (ii) shows the instant when the brush is one-fourth on segment 2 and three-fourth on segment 1. For this condition, the resistance of the path through segment 2 is three times the resistance of the path through segment 1 (**n** contact resistance varies inversely as the area of contact of brush with the segment). The brush again conducts a current of 40 A; 30 A through segment 1 and 10 A through segment 2. Note that current in coil A (the coil undergoing commutation) is reduced from 20 A to 10 A.

(iii) Fig. (2.7) (iii) shows the instant when the brush is one-half on segment 2 and one-half on segment 1. The brush again conducts 40 A; 20 A through segment 1 and 20 A through segment 2 (n now the resistances of the two parallel paths are equal). Note that now. current in coil A is zero.

(iv) Fig. (2.7) (iv) shows the instant when the brush is three-fourth on segment 2 and one-fourth on segment 1. The brush conducts a current of 40 A; 30 A through segment 2 and 10 A through segment 1. Note that current in coil A is 10 A but in the reverse direction to that before the start of commutation. The reader may see the action of the commutator in reversing the current in a coil as the coil passes the brush axis.

(v) Fig. (2.7) (v) shows the instant when the brush is in contact only with segment 2. The brush again conducts 40 A; 20 A from coil A and 20 A from the adjacent coil to coil A. Note that now current in coil A is 20 A but in the reverse direction. Thus the coil A has undergone commutation. Each coil undergoes commutation in this way as it passes the brush axis. Note that during commutation, the coil under consideration remains short-circuited by the brush.

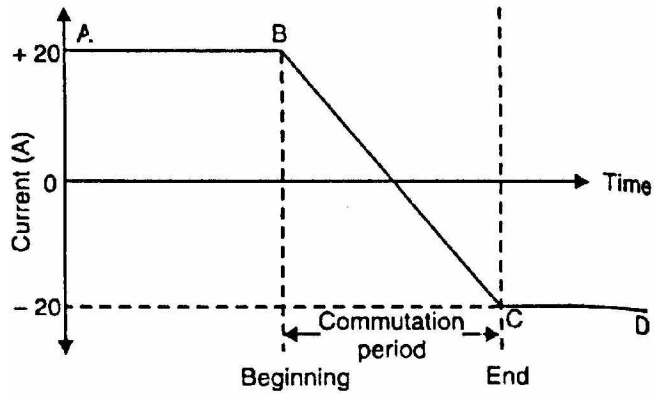

Fig. (2.8)

Fig. (2.8) shows the current-time graph for the coil A undergoing commutation. The horizontal line AB represents a constant current of 20 A upto the beginning of commutation. From the finish of commutation, it is represented by another horizontal line CD on the opposite side of the zero line and the same distance from it as AB i.e., the current has exactly reversed (– 20 A). The way in which current changes from B to C depends upon the conditions under which the coil undergoes commutation. If the current changes at a uniform rate (i.e., BC is a straight line), then it is called ideal commutation as shown in Fig. (2.8). Under such conditions, no sparking will take place between the brush and the commutator.

Practical difficulties

The ideal commutation (i.e., straight line change of current) cannot be attained in practice. This is mainly due to the fact that the armature coils have appreciable inductance. When the current in the coil undergoing commutation changes, self-induced e.m.f. is produced in the coil. This is generally called reactance voltage. This reactance voltage opposes the change of current in the coil undergoing commutation. The result is that the change of current in the coil undergoing commutation occurs more slowly than it would be under ideal

commutation. This is illustrated in Fig. (2.9). The straight line RC represents the ideal commutation whereas the curve BE represents the change in current when self-inductance of the coil is taken into account. Note that current CE (= 8A in Fig. 2.9) is flowing from the commutator segment 1 to the brush at the instant when they part company. This results in sparking just as when any other current-carrying circuit is broken. The sparking results in overheating of commutator-brush contact and causing damage to both.

Fig. (2.10) illustrates how sparking takes place between the commutator segment and the brush. At the end of commutation or short-circuit period, the current in coil A is reversed to a value of 12 A (instead of 20 A) due to inductance of the coil. When the brush breaks contact with segment 1, the remaining 8 A current jumps from segment 1 to the brush through air causing sparking between segment 1 and the brush.

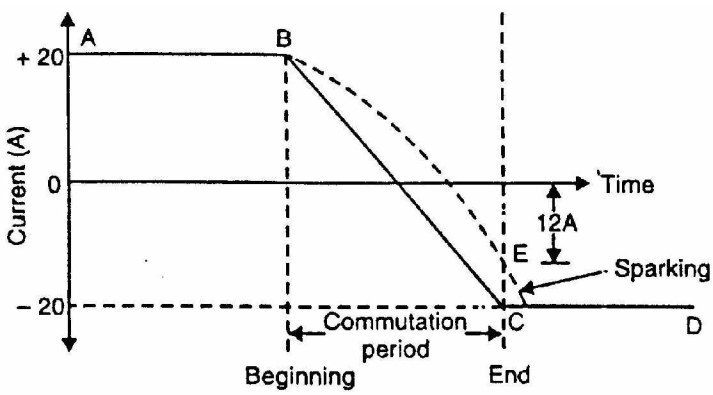

Fig. (2.9)

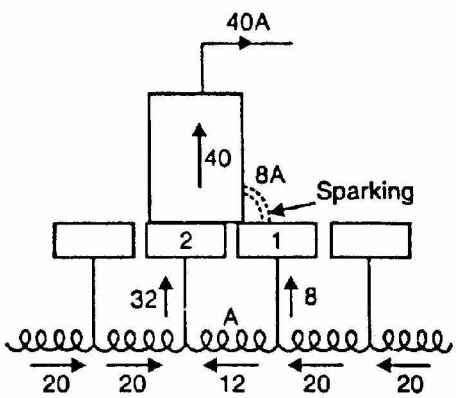

Fig. (2.10)

2.10 Calculation of Reactance Voltage

Reactance voltage = Coefficient of self-inductance × Rate of change of current

When a coil undergoes commutation, two commutator segments remain short-circuited by the brush. Therefore, the time of short circuit (or commutation period T_c) is equal to the time required by the commutator to move a distance equal to the circumferential thickness of the brush minus the thickness of one insultating strip of mica.

Let W_b = brush width in cm; W_m = mica thickness in cm

v = peripheral speed of commutator in cm/s

$$\therefore \quad \text{Commutation period, } T_c = \frac{W_b - W_m}{v} \quad \text{seconds}$$

The commutation period is very small, say of the order of 1/500 second.

Let the current in the coil undergoing commutation change from + I to – I (amperes) during the commutation. If L is the inductance of the coil, then reactance voltage is given by;

Re

a
c
t
a
n
c
e

v
o
l
t
a
g
e
,

$$E_R = L \times \frac{2I}{T_c}$$

f
o
r

l
i
n
e
a
r

c
o
m
m
u
t
a

t
i
o
n

2.11 Methods of Improving Commutation

Improving commutation means to make current reversal in the short-circuited coil as sparkless as possible. The following are the two principal methods of improving commutation:

(i) Resistance commutation
(ii) E.M.F. commutation

We shall discuss each method in turn.

2.12 Resistance Commutation

The reversal of current in a coil (i.e., commutation) takes place while the coil is short-circuited by the brush. Therefore, there are two parallel paths for the current as long as the short circuit exists. If the contact resistance between the brush and the commutator is made large, then current would divide in the inverse ratio of contact resistances (as for any two resistances in parallel). This is the key point in improving commutation. This is achieved by using carbon brushes (instead of Cu brushes) which have high contact resistance. This method of improving commutation is called resistance commutation.

Figs. (2.11) and (2.12) illustrates how high contact resistance of carbon brush improves commutation (i.e., reversal of current) in coil A. In Fig. (2.11) (i), the brush is entirely on segment 1 and, therefore, the current in coil A is 20 A. The coil A is yet to undergo commutation. As the armature rotates, the brush short-circuits the coil A and there are two parallel paths for the current into the brush. Fig. (2.11) (ii) shows the instant when the brush is one-fourth on segment 2 and three-fourth on segment 1. The equivalent electric circuit is shown in Fig. (2.11) (iii) where R_1 and R_2 represent the brush contact resistances on segments 1 and 2. A resistor is not shown for coil A since it is assumed that the coil resistance is

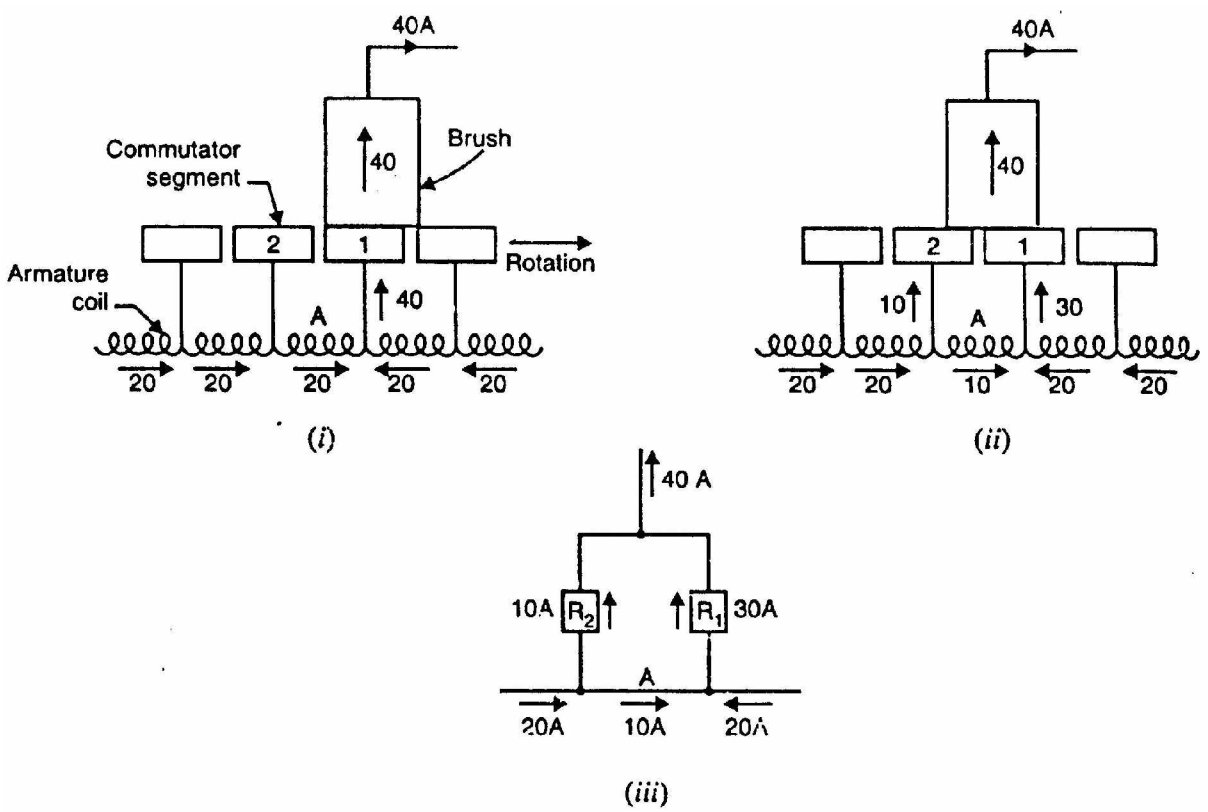

Fig. (2.11)

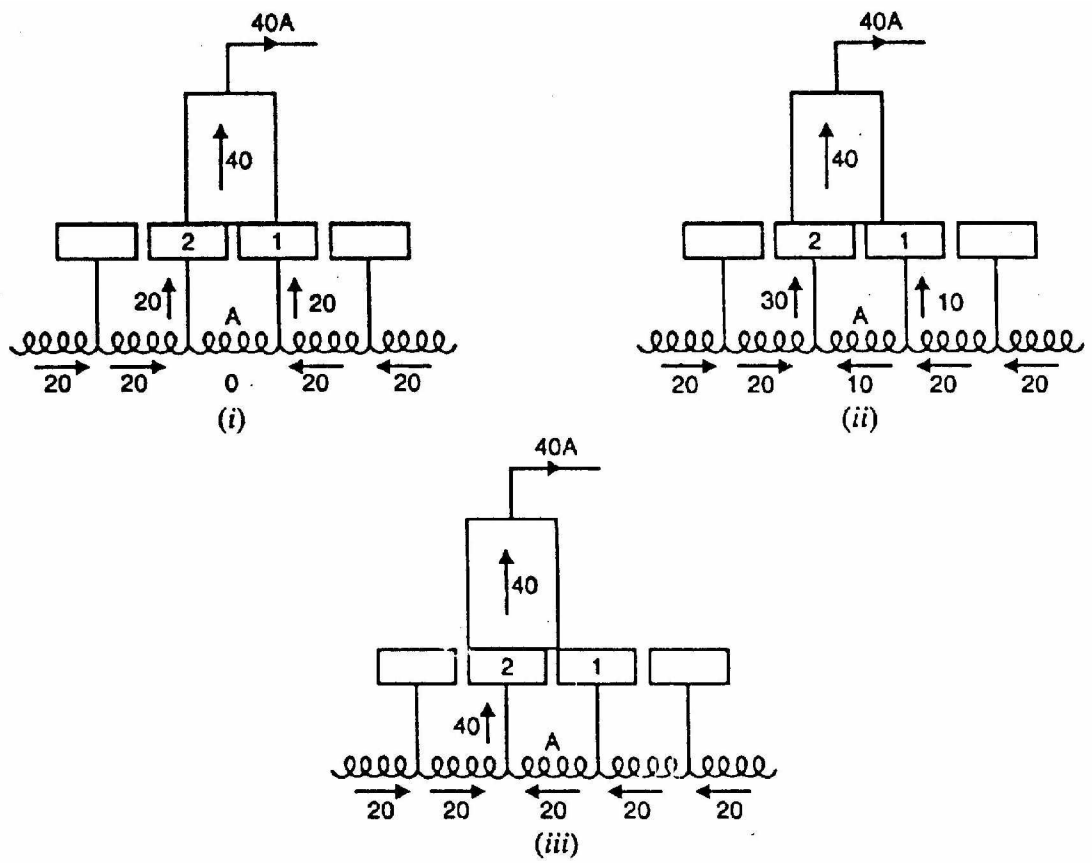

Fig.(2.12)

negligible as compared to the brush contact resistance. The values of current in the parallel paths of the equivalent circuit are determined by the respective resistances of the paths. For the condition shown in Fig. (2.11) (ii), resistor R_2 has three times the resistance of resistor R_1. Therefore, the current distribution in the paths will be as shown. Note that current in coil A is reduced from 20 A to 10 A due to division of current in (he inverse ratio of contact resistances. If the Cu brush is used (which has low contact resistance), R_1 R_2 and the current in coil A would not have reduced to 10 A.

As the carbon brush passes over the commutator, the contact area with segment 2 increases and that with segment 1 decreases i.e., R_2 decreases and R_1 increases. Therefore, more and more current passes to the brush through segment 2. This is illustrated in Figs. (2.12) (i) and (2.12) (ii), When the break between the brush and the segment 1 finally occurs [See Fig. 2.12 (iii)], the current in the coil is reversed and commutation is achieved.

It may be noted that the main cause of sparking during commutation is the production of reactance voltage and carbon brushes cannot prevent it. Nevertheless, the carbon brushes do help in improving commutation. The other minor advantages of carbon brushes are:

(i) The carbon lubricates and polishes the commutator.
(ii) If sparking occurs, it damages the commutator less than with copper brushes and the damage to the brush itself is of little importance.

2.13 E.M.F. Commutation

In this method, an arrangement is made to neutralize the reactance voltage by producing a reversing voltage in the coil undergoing commutation. The reversing voltage acts in opposition to the reactance voltage and neutralizes it to some extent. If the reversing voltage is equal to the reactance voltage, the effect of the latter is completely wiped out and we get sparkless commutation. The reversing voltage may be produced in the following two ways:

(i) By brush shifting
(ii) By using interpoles or compoles

(i) By brush shifting

In this method, the brushes are given sufficient forward lead (for a generator) to bring the short-circuited coil (i.e., coil undergoing commutation) under the influence of the next pole of opposite polarity. Since the short-circuited coil is now in the reversing field, the reversing voltage produced cancels the reactance voltage. This method suffers from the following drawbacks:

(a) The reactance voltage depends upon armature current. Therefore, the brush shift will depend on the magnitude of armature current which keeps on changing. This necessitates frequent shifting of brushes.
(b) The greater the armature current, the greater must be the forward lead for a generator. This increases the demagnetizing effect of armature reaction and further weakens the main field.

(ii) By using interpoles or compotes

The best method of neutralizing reactance voltage is by, using interpoles or compoles. This method is discussed in Sec. (2.14).

2.14 Interpoles or Compoles

The best way to produce reversing voltage to neutralize the reactance voltage is by using interpoles or compoles. These are small poles fixed to the yoke and spaced mid-way between the main poles (See Fig. 2.13). They are wound with comparatively few turns and connected in series with the armature so that they carry armature current. Their polarity is the same as the next main pole ahead in the direction of rotation for a generator (See Fig. 2.13). Connections for a d.c. generator with interpoles is shown in Fig. (2.14).

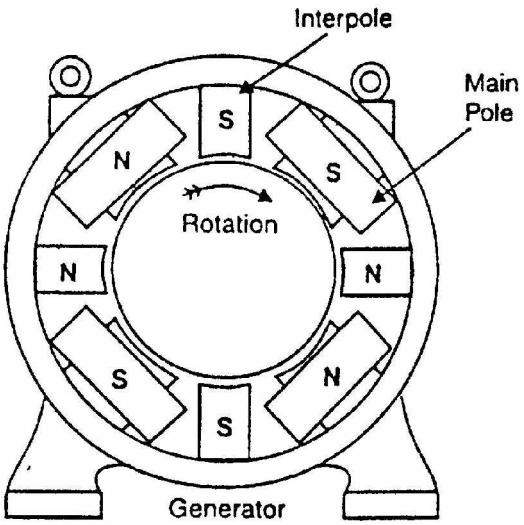

Fig. (2.13)

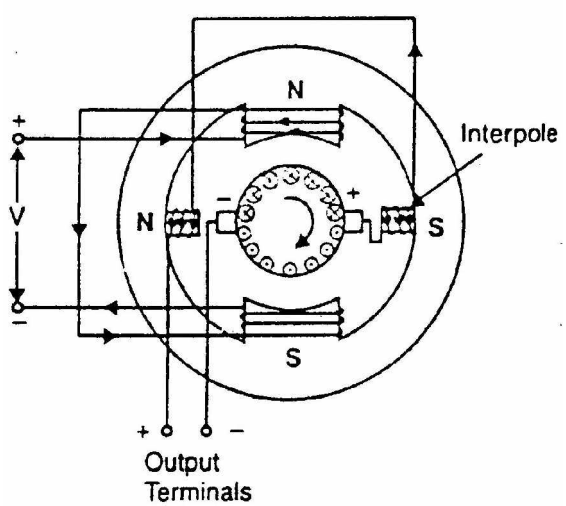

Fig. (2.14)

Functions of Interpoles

The machines fitted with interpoles have their brushes set on geometrical neutral axis (no lead). The interpoles perform the following two functions:

(i) As their polarity is the same as the main pole ahead (for a generator), they induce an e.m.f. in the coil (undergoing commutation) which opposes

reactance voltage. This leads to sparkless commutation. The e.m.f. induced by compoles is known as commutating or reversing e.m.f. Since the interpoles carry the armature current and the reactance voltage is also proportional to armature current, the neutralization of reactance voltage is automatic.

(ii) The m.m.f. of the compoles neutralizes the cross-magnetizing effect of armature reaction in small region in the space between the main poles. It is because the two m.m.f.s oppose each other in this region.

Fig. (2.15) shows the circuit diagram of a shunt generator with commutating winding and compensating winding. Both these windings are connected in series with the armature and so they carry the armature current. However, the functions they perform must be understood clearly. The main function of commutating winding is to produce reversing (or commutating) e.m.f. in order to cancel the reactance voltage. In addition to this, the m.m.f. of the commutating winding neutralizes the cross-magnetizing ampere-turns in the space between the main poles. The compensating winding neutralizes the cross-magnetizing effect of armature reaction under the pole faces.

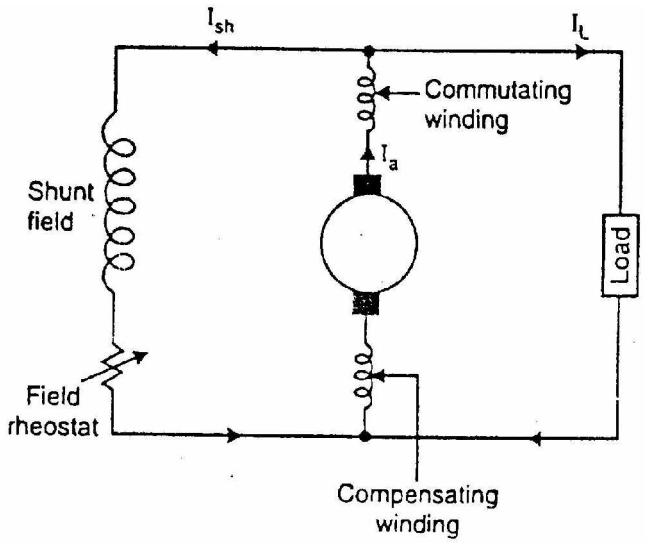

Fig. (2.15)

2.15 Equalizing Connections

We know that the armature circuit in lap winding of a multipolar machine has as many parallel paths as the number of poles. Because of wear in the bearings, and for other reasons, the air gaps in a generator become unequal and, therefore, the flux in some poles becomes greater than in others. This causes the voltages of the different paths to be unequal. With unequal voltages in these parallel paths, circulating current will flow even if no current is supplied to an external load. If these currents are large, some of the brushes will be required to carry a greater current at full load than they were designed to carry and this will cause sparking. To relieve the brushes of these circulating currents, points on the armature that are at the same potential are connected together by means of copper bars called equalizer rings. This is achieved by connecting to the same equalizer ring the coils that occupy the same positions relative to the poles (See Fig. 2.16). Thus referring to Fig. (2.16), the coil consisting of conductor 1 and conductor 8

occupies the same position relative to the poles as the coil consisting of conductors 13 and 20. Therefore, the two coils are connected to the same equalizer ring. The equalizers provide a low resistance path for the circulating current. As a result, the circulating current due to the slight differences in the voltages of the various parallel paths passes through the equalizer rings instead of passing through the brushes. This reduces sparking.

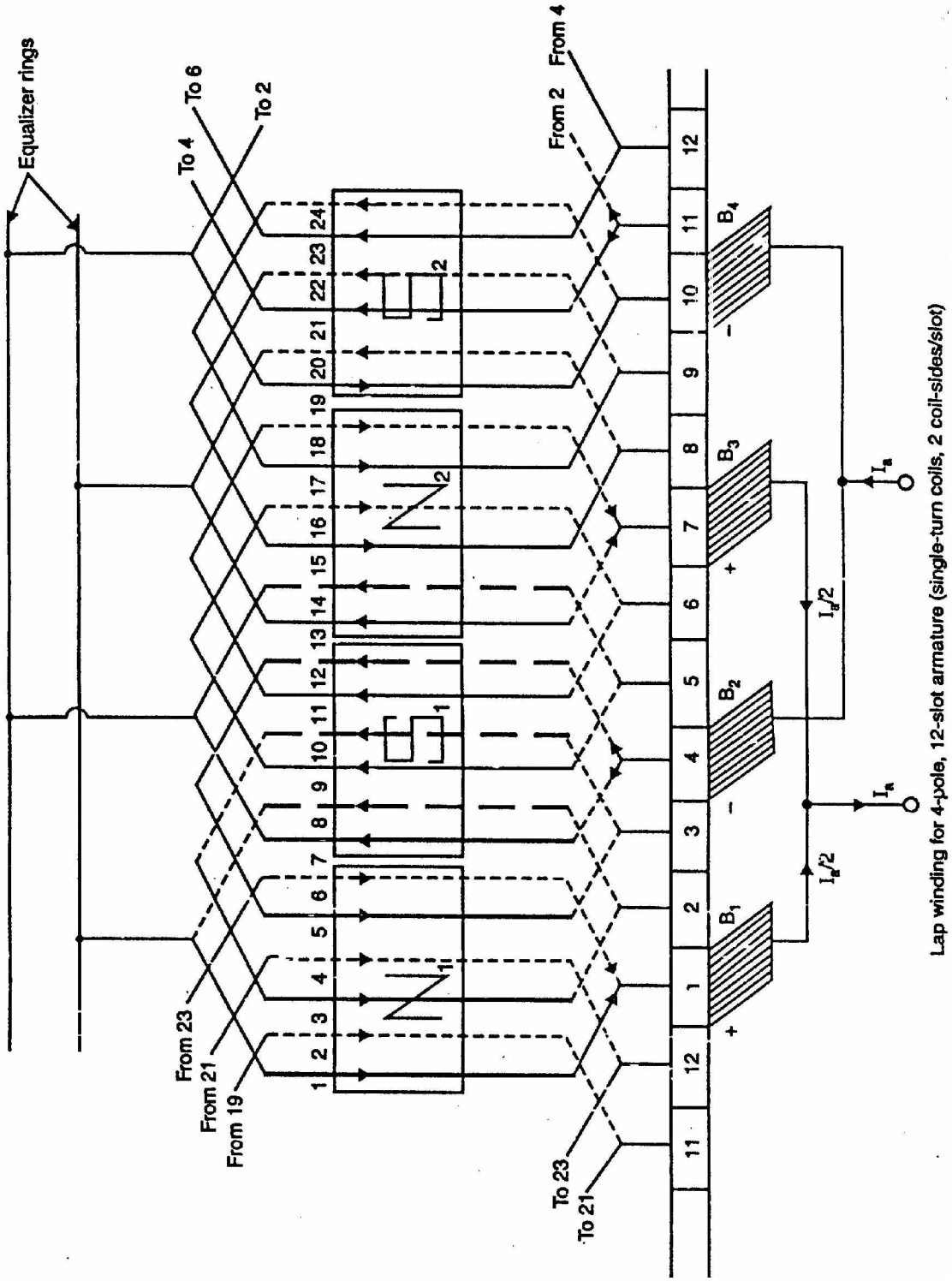

Fig. (2.16)

Equalizer rings should be used only on windings in which the number of coils is a multiple of the number of poles. For best results, each coil should be connected to an equalizer ring but this is seldom done. Satisfactory results are obtained by connecting about every third coil to an equalizer ring. In order to distribute the connections to the equalizer rings equally, the number of coils per pole must be divisible by the connection pitch.

Note. Equalizer rings are not used in wave winding because there is no imbalance in the voltages of the two parallel paths. This is due to the fact that conductors in each of the two paths pass under all N and S poles successively (unlike a lap winding where all conductors in any parallel path lie under one pair of poles). Therefore, even if there are inequalities in pole flux, they will affect each path equally.

Chapter (3)

D.C. Generator Characteristics

Introduction

The speed of a d.c. machine operated as a generator is fixed by the prime mover. For general-purpose operation, the prime mover is equipped with a speed governor so that the speed of the generator is practically constant. Under such condition, the generator performance deals primarily with the relation between excitation, terminal voltage and load. These relations can be best exhibited graphically by means of curves known as generator characteristics. These characteristics show at a glance the behaviour of the generator under different load conditions.

3.1 D.C. Generator Characteristics

The following are the three most important characteristics of a d.c. generator:

1. Open Circuit Characteristic (O.C.C.)

This curve shows the relation between the generated e.m.f. at no-load (E_0) and the field current (I_f) at constant speed. It is also known as magnetic characteristic or no-load saturation curve. Its shape is practically the same for all generators whether separately or self-excited. The data for O.C.C. curve are obtained experimentally by operating the generator at no load and constant speed and recording the change in terminal voltage as the field current is varied.

2. Internal or Total characteristic (E/I_a)

This curve shows the relation between the generated e.m.f. on load (E) and the armature current (I_a). The e.m.f. E is less than E_0 due to the demagnetizing effect of armature reaction. Therefore, this curve will lie below the open circuit characteristic (O.C.C.). The internal characteristic is of interest chiefly to the designer. It cannot be obtained directly by experiment. It is because a voltmeter cannot read the e.m.f. generated on load due to the voltage drop in armature resistance. The internal characteristic can be obtained from external characteristic if winding resistances are known because armature reaction effect is included in both characteristics.

3. External characteristic (V/I_L)

This curve shows the relation between the terminal voltage (V) and load current (I_L). The terminal voltage V will be less than E due to voltage drop in the armature circuit. Therefore, this curve will lie below the internal characteristic. This characteristic is very important in determining the suitability of a generator for a given purpose. It can be obtained by making simultaneous measurements of terminal voltage and load current (with voltmeter and ammeter) of a loaded generator.

3.2 Open Circuit Characteristic of a D.C. Generator

The O.C.C. for a d.c. generator is determined as follows. The field winding of the d.c. generator (series or shunt) is disconnected from the machine and is separately excited from an external d.c. source as shown in Fig. (3.1) (ii). The generator is run at fixed speed (i.e., normal speed). The field current (I_f) is increased from zero in steps and the corresponding values of generated e.m.f. (E_0) read off on a voltmeter connected across the armature terminals. On plotting the relation between E_0 and I_f, we get the open circuit characteristic as shown in Fig. (3.1) (i).

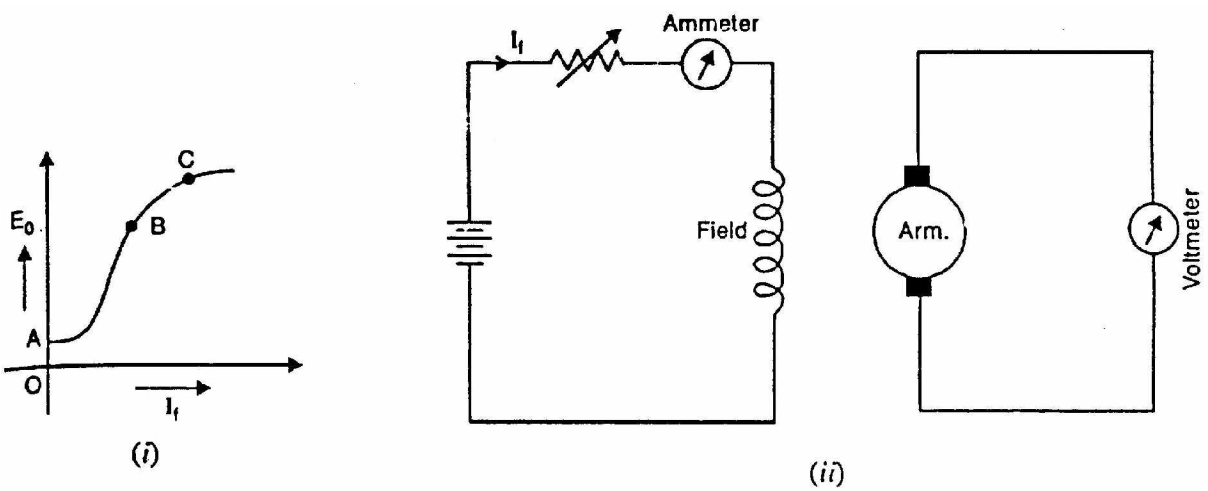

Fig. (3.1)

The following points may be noted from O.C.C.:

(i) When the field current is zero, there is some generated e.m.f. OA. This is due to the residual magnetism in the field poles.

(ii) Over a fairly wide range of field current (upto point B in the curve), the curve is linear. It is because in this range, reluctance of iron is negligible as compared with that of air gap. The air gap reluctance is constant and hence linear relationship.

(iii) After point B on the curve, the reluctance of iron also comes into picture. It is because at higher flux densities, μ_r for iron decreases and reluctance of

iron is no longer negligible. Consequently, the curve deviates from linear relationship.

(iv) After point C on the curve, the magnetic saturation of poles begins and E_0 tends to level off.

The reader may note that the O.C.C. of even self-excited generator is obtained by running it as a separately excited generator.

3.3 Characteristics of a Separately Excited D.C. Generator

The obvious disadvantage of a separately excited d.c. generator is that we require an external d.c. source for excitation. But since the output voltage may be controlled more easily and over a wide range (from zero to a maximum), this type of excitation finds many applications.

(i) Open circuit characteristic.

The O.C.C. of a separately excited generator is determined in a manner described in Sec. (3.2). Fig. (3.2) shows the variation of generated e.m f. on no load with field current for various fixed speeds. Note that if the value of constant speed is increased, the steepness of the curve also increases. When the field current is zero, the residual magnetism in the poles will give rise to the small initial e.m.f. as shown.

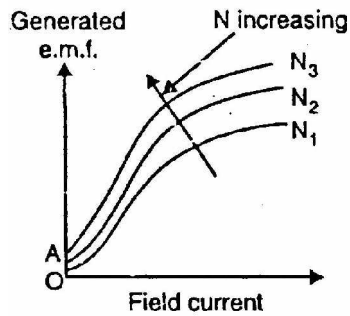

Fig. (3.2)

(ii) Internal and External Characteristics

The external characteristic of a separately excited generator is the curve between the terminal voltage (V) and the load current I_L (which is the same as armature current in this case). In order to determine the external characteristic, the circuit set up is as shown in Fig. (3.3) (i). As the load current increases, the terminal voltage falls due to two reasons:

(a) The armature reaction weakens the main flux so that actual e.m.f. generated E on load is less than that generated (E_0) on no load.

(b) There is voltage drop across armature resistance (= $I_L R_a = I_a R_a$).

Due to these reasons, the external characteristic is a drooping curve [curve 3 in Fig. 3.3 (ii)]. Note that in the absence of armature reaction and armature drop, the generated e.m.f. would have been E_0 (curve 1).

The internal characteristic can be determined from external characteristic by adding $I_L R_a$ drop to the external characteristic. It is because armature reaction drop is included in the external characteristic. Curve 2 is the internal

characteristic of the generator and should obviously lie above the external characteristic.

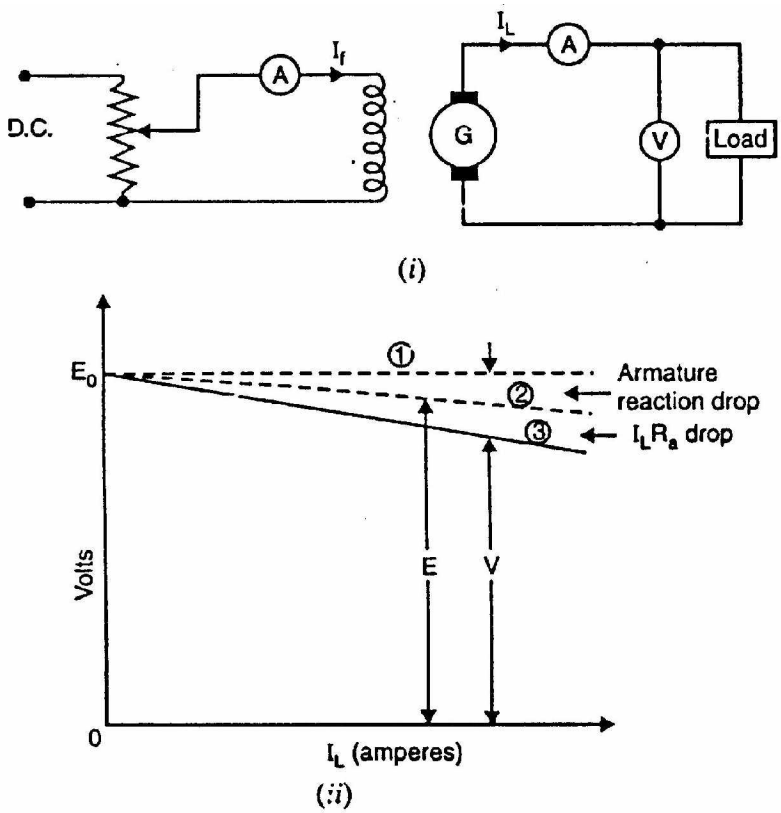

Fig. (3.3)

3.4 Voltage Build-Up in a Self-Excited Generator

Let us see how voltage builds up in a self-excited generator.

(i) Shunt generator

Consider a shunt generator. If the generator is run at a constant speed, some e.m.f. will be generated due to residual magnetism in the main poles. This small e.m.f. circulates a field current which in turn produces additional flux to reinforce the original residual flux (provided field winding connections are correct). This process continues and the generator builds up the normal generated voltage following the O.C.C. shown in Fig. (3.4) (i).

The field resistance R_f can be represented by a straight line passing through the origin as shown in Fig. (3.4) (ii). The two curves can be shown on the same diagram as they have the same ordinate [See Fig. 3.4 (iii)].

Since the field circuit is inductive, there is a delay in the increase in current upon closing the field circuit switch The rate at which the current increases depends

upon the voltage available for increasing it. Suppose at any instant, the field current is i (= OA) and is increasing at the rate di/dt. Then,

$$E_0 = i\,R_f + L\frac{di}{dt}$$

where R_f = total field circuit resistance
L = inductance of field circuit

At the considered instant, the total e.m.f. available is AC [See Fig. 3.4 (iii)]. An amount AB of the c.m.f. AC is absorbed by the voltage drop iR_f and the remainder part BC is available to overcome L di/dt. Since this surplus voltage is available, it is possible for the field current to increase above the value OA. However, at point D, the available voltage is OM and is all absorbed by i R_f drop. Consequently, the field current cannot increase further and the generator build up stops.

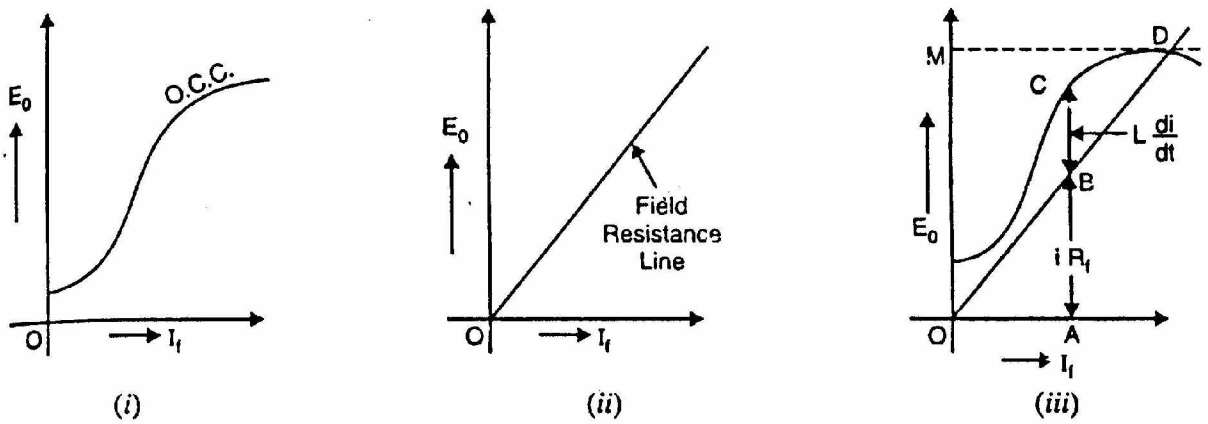

Fig. (3.4)

We arrive at a very important conclusion that the voltage build up of the generator is given by the point of intersection of O.C.C. and field resistance line. Thus in Fig. (3.4) (iii), D is point of intersection of the two curves. Hence the generator will build up a voltage OM.

(ii) Series generator

During initial operation, with no current yet flowing, a residual voltage will be generated exactly as in the case of a shunt generator. The residual voltage will cause a current to flow through the whole series circuit when the circuit is closed. There will then be voltage build up to an equilibrium point exactly analogous to the build up of a shunt generator. The voltage build up graph will be similar to that of shunt generator except that now load current (instead of field current for shunt generator) will be taken along x-axis.

(iii) Compound generator

When a compound generator has its series field flux aiding its shunt field flux, the machine is said to be cumulative compound. When the series field is connected in reverse so that its field flux opposes the shunt field flux, the generator is then differential compound.

The easiest way to build up voltage in a compound generator is to start under no load conditions. At no load, only the shunt field is effective. When no-load voltage build up is achieved, the generator is loaded. If under load, the voltage rises, the series field connection is cumulative. If the voltage drops significantly, the connection is differential compound.

3.5 Critical Field Resistance for a Shunt Generator

We have seen above that voltage build up in a shunt generator depends upon field circuit resistance. If the field circuit resistance is R_1 (line OA), then generator will build up a voltage OM as shown in Fig. (3.5). If the field circuit resistance is increased to R_2 (tine OB), the generator will build up a voltage OL, slightly less than OM. As the field circuit resistance is increased, the slope of resistance line also increases. When the field resistance line becomes tangent (line OC) to O.C.C., the generator would just excite. If the field circuit resistance is increased beyond this point (say line OD), the generator will fail to excite. The field circuit resistance represented by line OC (tangent to O.C.C.) is called critical field resistance R_C for the shunt generator. It may be defined as under:

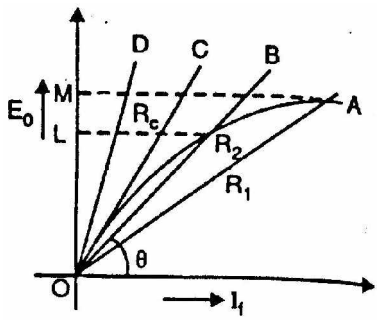

Fig. (3.5)

The maximum field circuit resistance (for a given speed) with which the shunt generator would just excite is known as its critical field resistance.

It should be noted that shunt generator will build up voltage only if field circuit resistance is less than critical field resistance.

3.6 Critical Resistance for a Series Generator

Fig. (3.6) shows the voltage build up in a series generator. Here R_1, R_2 etc. represent the total circuit resistance (load resistance and field winding resistance). If the total circuit resistance is R_1, then series generator will build up a voltage OL. The

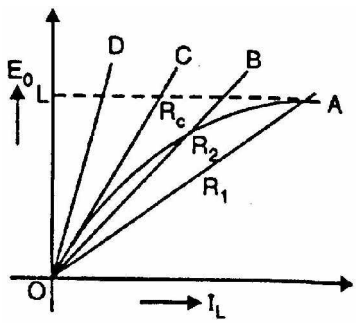

Fig. (3.6)

line OC is tangent to O.C.C. and represents the critical resistance R_C for a series generator. If the total resistance of the circuit is more than R_C (say line OD), the generator will fail to build up voltage. Note that Fig. (3.6) is similar to Fig. (3.5) with the following differences:

(i) In Fig. (3.5), R_1, R_2 etc. represent the total field circuit resistance. However, R_1, R_2 etc. in Fig. (3.6) represent the total circuit resistance (load resistance and series field winding resistance etc.).

(ii) In Fig (3.5), field current alone is represented along X-axis. However, in Fig. (3.6) load current I_L is represented along Y-axis. Note that in a series generator, field current = load current I_L.

3.7 Characteristics of Series Generator

Fig. (3.7) (i) shows the connections of a series wound generator. Since there is only one current (that which flows through the whole machine), the load current is the same as the exciting current.

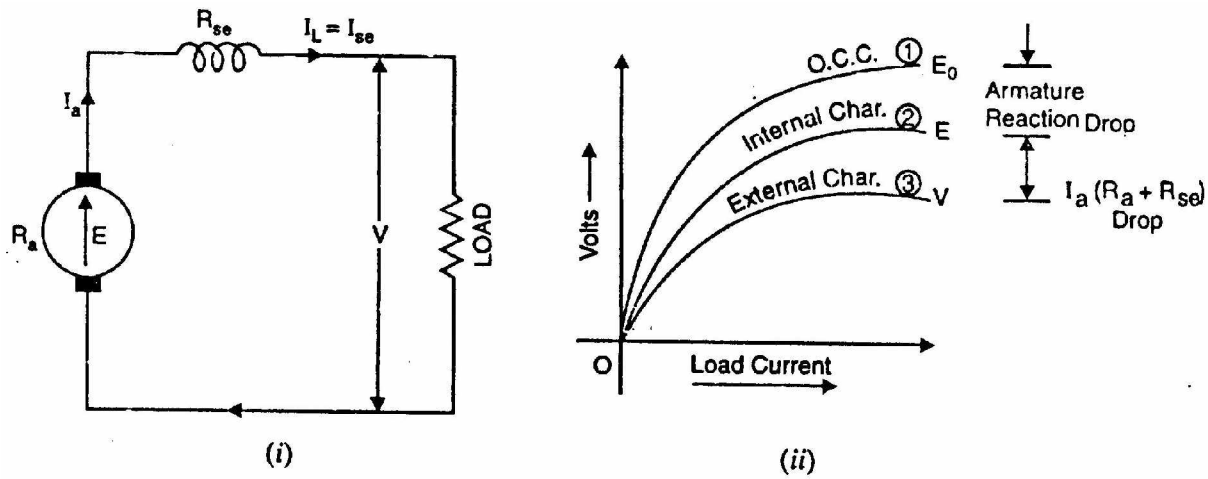

Fig. (3.7)

(i) O.C.C.

Curve 1 shows the open circuit characteristic (O.C.C.) of a series generator. It can be obtained experimentally by disconnecting the field winding from the machine and exciting it from a separate d.c. source as discussed in Sec. (3.2).

(ii) Internal characteristic

Curve 2 shows the total or internal characteristic of a series generator. It gives the relation between the generated e.m.f. E. on load and armature current. Due to armature reaction, the flux in the machine will be less than the flux at no load. Hence, e.m.f. E generated under load conditions will be less than the e.m.f. E_0 generated under no load conditions. Consequently, internal characteristic curve

lies below the O.C.C. curve; the difference between them representing the effect of armature reaction [See Fig. 3.7 (ii)].

(iii) External characteristic

Curve 3 shows the external characteristic of a series generator. It gives the relation between terminal voltage and load current I_L:.

$$V = E - I_a(R_a + R_{se})$$

Therefore, external characteristic curve will lie below internal characteristic curve by an amount equal to ohmic drop [i.e., $I_a(R_a + R_{se})$] in the machine as shown in Fig. (3.7) (ii).

The internal and external characteristics of a d.c. series generator can be plotted from one another as shown in Fig. (3.8). Suppose we are given the internal characteristic of the generator. Let the line OC represent the resistance of the whole machine i.e. $R_a + R_{se}$. If the load current is OB, drop in the machine is AB i.e.

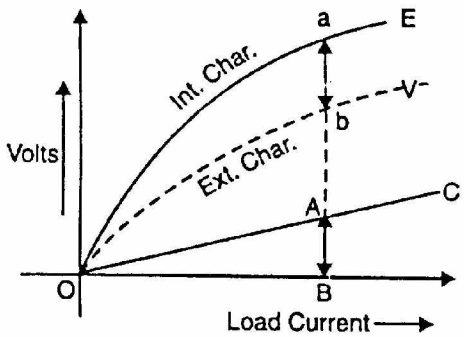

Fig. (3.8)

$$AB = \text{Ohmic drop in the machine} = OB(R_a + R_{se})$$

Now raise a perpendicular from point B and mark a point b on this line such that ab = AB. Then point b will lie on the external characteristic of the generator. Following similar procedure, other points of external characteristic can be located. It is easy to see that we can also plot internal characteristic from the external characteristic.

3.8 Characteristics of a Shunt Generator

Fig (3.9) (i) shows the connections of a shunt wound generator. The armature current I_a splits up into two parts; a small fraction I_{sh} flowing through shunt field winding while the major part I_L goes to the external load.

(i) O.C.C.

The O.C.C. of a shunt generator is similar in shape to that of a series generator as shown in Fig. (3.9) (ii). The line OA represents the shunt field circuit resistance. When the generator is run at normal speed, it will build up a voltage OM. At no-load, the terminal voltage of the generator will be constant (= OM) represented by the horizontal dotted line MC.

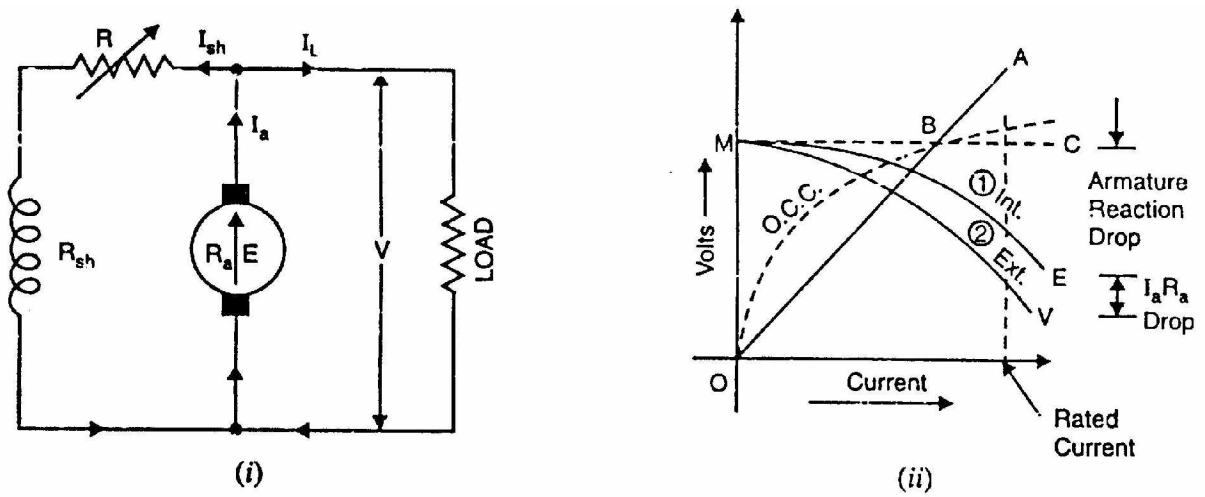

Fig. (3.9)

(ii) Internal characteristic

When the generator is loaded, flux per pole is reduced due to armature reaction. Therefore, e.m.f. E generated on load is less than the e.m.f. generated at no load. As a result, the internal characteristic (E/I_a) drops down slightly as shown in Fig. (3.9) (ii).

(iii) External characteristic

Curve 2 shows the external characteristic of a shunt generator. It gives the relation between terminal voltage V and load current I_L.

$$V = E - I_a R_a = E - (I_L + I_{sh})R_a$$

Therefore, external characteristic curve will lie below the internal characteristic curve by an amount equal to drop in the armature circuit [i.e., $(I_L + I_{sh})R_a$] as shown in Fig. (3.9) (ii).

Note. It may be seen from the external characteristic that change in terminal voltage from no-load to full load is small. The terminal voltage can always be maintained constant by adjusting the field rheostat R automatically

3.9 Critical External Resistance for Shunt Generator

If the load resistance across the terminals of a shunt generator is decreased, then load current increase? However, there is a limit to the increase in load current with the decrease of load resistance. Any decrease of load resistance beyond this point, instead of increasing the current, ultimately results in

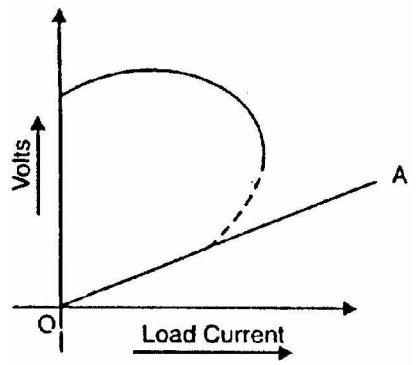

Fig. (3.10)

reduced current. Consequently, the external characteristic turns back (dotted curve) as shown in Fig. (3.10). The tangent OA to the curve represents the minimum external resistance required to excite the shunt generator on load and is called critical external resistance. If the resistance of the external circuit is less than the critical external resistance (represented by tangent OA in Fig. 3.10), the machine will refuse to excite or will de-excite if already running This means that external resistance is so low as virtually to short circuit the machine and so doing away with its excitation.

Note. There are two critical resistances for a shunt generator viz., (i) critical field resistance (ii) critical external resistance. For the shunt generator to build up voltage, the former should not be exceeded and the latter must not be gone below.

3.10 How to Draw O.C.C. at Different Speeds?

If we are given O.C.C. of a generator at a constant speed N_1, then we can easily draw the O.C.C. at any other constant speed N_2. Fig (3.11) illustrates the procedure. Here we are given O.C.C. at a constant speed N_1. It is desired to find the O.C.C. at constant speed N_2 (it is assumed that $n_1 < N_2$). For constant excitation, $E \propto N$.

$$\therefore \quad \frac{E_2}{E_1} = \frac{N_2}{N_1}$$

or

$$E_2 = E_1 \times \frac{N_2}{N_1}$$

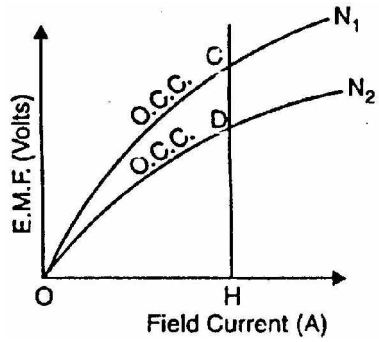

Fig. (3.11)

As shown in Fig. (3.11), for I_f = OH, E_1 = HC. Therefore, the new value of e.m.f. (E_2) for the same I_f but at N_2 i

$$E_2 = HC \times \frac{N_2}{N_1} = HD$$

This locates the point D on the new O.C.C. at N_2. Similarly, other points can be located taking different values of I_f. The locus of these points will be the O.C.C. at N_2.

3.11 Critical Speed (N_C)

The critical speed of a shunt generator is the minimum speed below which it fails to excite. Clearly, it is the speed for which the given shunt field resistance represents the critical resistance. In Fig. (3.12), curve 2 corresponds to critical speed because the shunt field resistance (R_{sh}) line is tangential to it. If the

generator runs at full speed N, the new O.C.C. moves upward and the R'_{sh} line represents critical resistance for this speed.

$\therefore$ Speed $\propto$ Critical resistance

In order to find critical speed, take any convenient point C on excitation axis and erect a perpendicular so as to cut R_{sh} and R'_{sh} lines at points B and A respectively. Then,

$$\frac{BC}{AC} = \frac{N_C}{N}$$

or $$N_C = N \times \frac{BC}{AC}$$

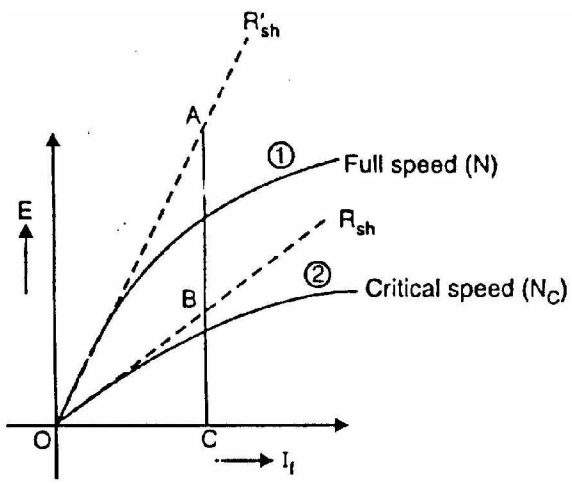

Fig. (3.12)

3.12 Conditions for Voltage Build-Up of a Shunt Generator

The necessary conditions for voltage build-up in a shunt generator are:

(i) There must be some residual magnetism in generator poles.

(ii) The connections of the field winding should be such that the field current strengthens the residual magnetism.

(iii) The resistance of the field circuit should be less than the critical resistance. In other words, the speed of the generator should be higher than the critical speed.

3.13 Compound Generator Characteristics

In a compound generator, both series and shunt excitation are combined as shown in Fig. (3.13). The shunt winding can be connected either across the armature only (short-shunt connection S) or across armature plus series field (long-shunt connection G). The compound generator can be cumulatively compounded or differentially compounded generator. The latter is rarely used in practice. Therefore, we shall discuss the characteristics of cumulatively-compounded generator. It may be noted that external characteristics of long and short shunt compound generators are almost identical.

External characteristic

Fig. (3.14) shows the external characteristics of a cumulatively compounded generator. The series excitation aids the shunt excitation. The degree of

compounding depends upon the increase in series excitation with the increase in load current.

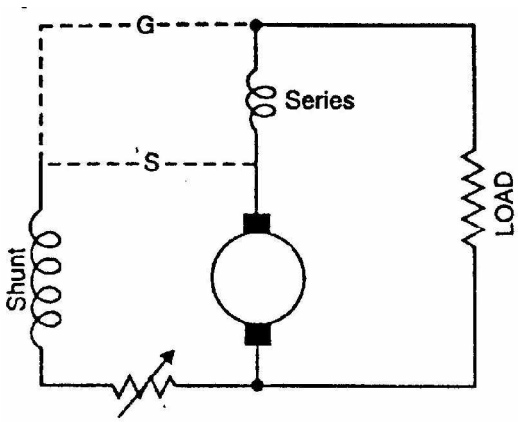

Fig. (3.13)

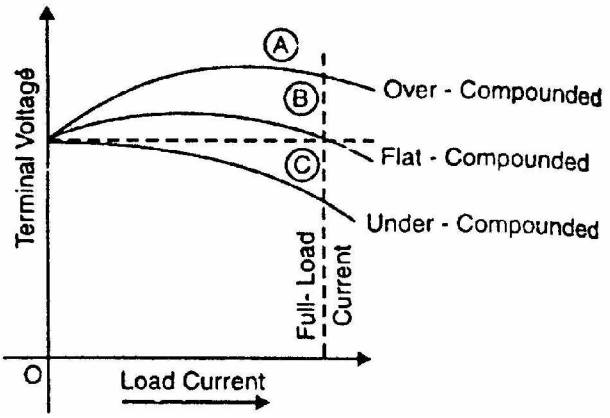

Fig. (3.14)

(i) If series winding turns are so adjusted that with the increase in load current the terminal voltage increases, it is called over-compounded generator. In such a case, as the load current increases, the series field m.m.f. increases and tends to increase the flux and hence the generated voltage. The increase in generated voltage is greater than the I_aR_a drop so that instead of decreasing, the terminal voltage increases as shown by curve A in Fig. (3.14).

(ii) If series winding turns are so adjusted that with the increase in load current, the terminal voltage substantially remains constant, it is called flat-compounded generator. The series winding of such a machine has lesser number of turns than the one in over-compounded machine and, therefore, does not increase the flux as much for a given load current. Consequently, the full-load voltage is nearly equal to the no-load voltage as indicated by curve B in Fig (3.14).

(iii) If series field winding has lesser number of turns than for a flat-compounded machine, the terminal voltage falls with increase in load current as indicated by curve C m Fig. (3.14). Such a machine is called under-compounded generator.

3.14 Voltage Regulation

The change in terminal voltage of a generator between full and no load (at constant speed) is called the voltage regulation, usually expressed as a percentage of the voltage at full-load.

$$\%\text{Voltage regulation} = \frac{V_{NL} - V_{FL}}{V_{FL}} \times 100$$

where V_{NL} = Terminal voltage of generator at no load

V_{FL} = Terminal voltage of generator at full load

Note that voltage regulation of a generator is determined with field circuit and speed held constant. If the voltage regulation of a generator is 10%, it means that terminal voltage increases 10% as the load is changed from full load to no load.

3.15 Parallel Operation of D.C. Generators

In a d.c. power plant, power is usually supplied from several generators of small ratings connected in parallel instead of from one large generator. This is due to the following reasons:

(i) Continuity of service

If a single large generator is used in the power plant, then in case of its breakdown, the whole plant will be shut down. However, if power is supplied from a number of small units operating in parallel, then in case of failure of one unit, the continuity of supply can be maintained by other healthy units.

(ii) Efficiency

Generators run most efficiently when loaded to their rated capacity. Electric power costs less per kWh when the generator producing it is efficiently loaded. Therefore, when load demand on power plant decreases, one or more generators can be shut down and the remaining units can be efficiently loaded.

(iii) Maintenance and repair

Generators generally require routine-maintenance and repair. Therefore, if generators are operated in parallel, the routine or emergency operations can be performed by isolating the affected generator while load is being supplied by other units. This leads to both safety and economy.

(iv) Increasing plant capacity

In the modern world of increasing population, the use of electricity is continuously increasing. When added capacity is required, the new unit can be simply paralleled with the old units.

(v) Non-availability of single large unit

In many situations, a single unit of desired large capacity may not be available. In that case a number of smaller units can be operated in parallel to meet the load requirement. Generally a single large unit is more expensive.

2.16 Connecting Shunt Generators in Parallel

The generators in a power plant are connected in parallel through bus-bars. The bus-bars are heavy thick copper bars and they act as +ve and –ve terminals. The positive terminals of the generators are .connected to the +ve side of bus-bars and negative terminals to the negative side of bus-bars.

Fig. (3.15) shows shunt generator 1 connected to the bus-bars and supplying load. When the load on the power plant increases beyond the capacity of this generator, the second shunt generator 2 is connected in parallel wish the first to meet the increased load demand. The procedure for paralleling generator 2 with generator 1 is as under:

(i) The prime mover of generator 2 is brought up to the rated speed. Now switch S_4 in the field circuit of the generator 2 is closed.

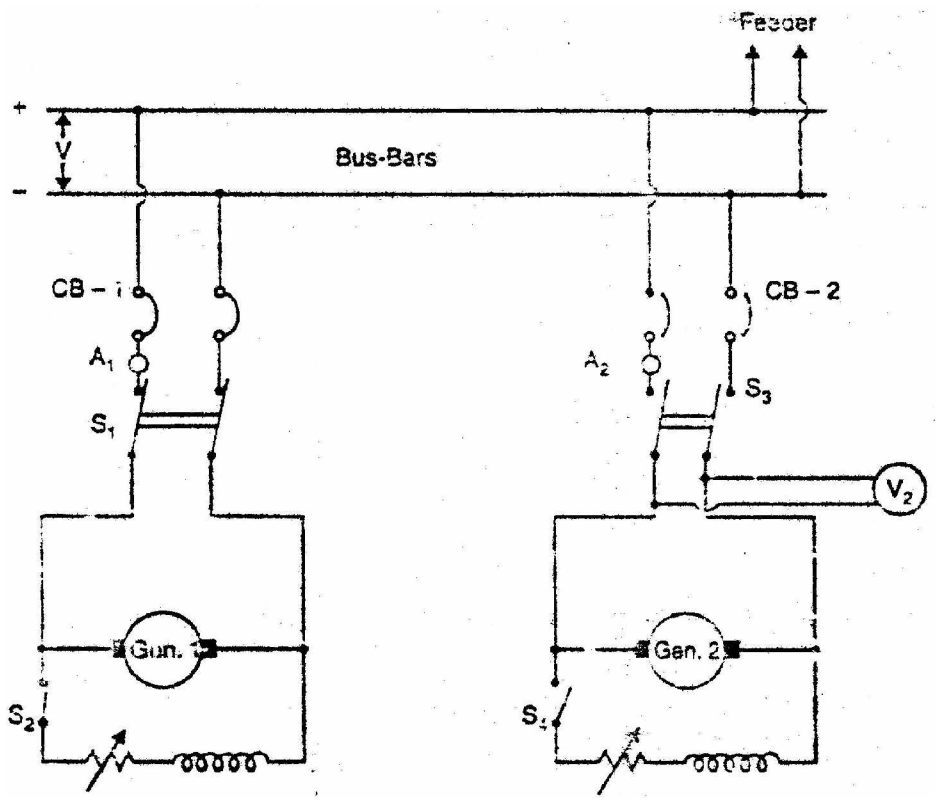

Fig. (3.15)

(ii) Next circuit breaker CB-2 is closed and the excitation of generator 2 is adjusted till it generates voltage equal to the bus-bars voltage. This is indicated by voltmeter V_2.

(iii) Now the generator 2 is ready to be paralleled with generator 1. The main switch S_3, is closed, thus putting generator 2 in parallel with generator 1. Note that generator 2 is not supplying any load because its generated e.m.f. is equal to bus-bars voltage. The generator is said to be “floating” (i.e., not supplying any load) on the bus-bars.

(iv) If generator 2 is to deliver any current, then its generated voltage E should be greater than the bus-bars voltage V. In that case, current supplied by it is $I = (E - V)/R_a$ where R_a is the resistance of the armature circuit. By increasing the field current (and hence induced e.m.f. E), the generator 2 can be made to supply proper amount of load.

(v) The load may be shifted from one shunt generator to another merely by adjusting the field excitation. Thus if generator 1 is to be shut down, the whole load can be shifted onto generator 2 provided it has the capacity to supply that load. In that case, reduce the current supplied by generator 1 to zero (This will be indicated by ammeter A_1) open C.B.-1 and then open the main switch S_1.

3.17 Load Sharing

The load sharing between shunt generators in parallel can be easily regulated because of their drooping characteristics. The load may be shifted from one generator to another merely by adjusting the field excitation. Let us discuss the load sharing of two generators which have unequal no-load voltages.

Let E_1, E_2 = no-load voltages of the two generators

R_1, R_2 = their armature resistances

V = common terminal voltage (Bus-bars voltage)

Then $$I_1 = \frac{E_1 - V}{R_1} \quad \text{and} \quad I_2 = \frac{E_2 - V}{R_2}$$

Thus current output of the generators depends upon the values of E_1 and E_3. These values may be changed by field rheostats. The common terminal voltage (or bus-bars voltage) will depend upon (i) the e.m.f.s of individual generators and (ii) the total load current supplied. It is generally desired to keep the bus-bars voltage constant. This can be achieved by adjusting the field excitations of the generators operating in parallel.

3.18 Compound Generators in Parallel

Under-compounded generators also operate satisfactorily in parallel but over-compounded generators will not operate satisfactorily unless their series fields are paralleled. This is achieved by connecting two negative brushes together as shown in Fig. (3.16) (i). The conductor used to connect these brushes is generally called equalizer bar. Suppose that an attempt is made to operate the two generators in Fig. (3.16) (ii) in parallel without an equalizer bar. If, for any reason, the current supplied by generator 1 increases slightly, the current in its series field will increase and raise the generated voltage. This will cause generator 1 to take more load. Since total load supplied to the system is constant, the current in generator 2 must decrease and as a result its series field is

weakened. Since this effect is cumulative, the generator 1 will take the entire load and drive generator 2 as a motor. Under such conditions, the current in the two machines will be in the direction shown in Fig. (3.16) (ii). After machine 2 changes from a generator to a motor, the current in the shunt field will remain in the same direction, but the current in the armature and series field will reverse. Thus the magnetizing action, of the series field opposes that of the shunt field. As the current taken by the machine 2 increases, the demagnetizing action of series field becomes greater and the resultant field becomes weaker. The resultant field will finally become zero and at that time machine 2 will short-circuit machine 1, opening the breaker of either or both machines.

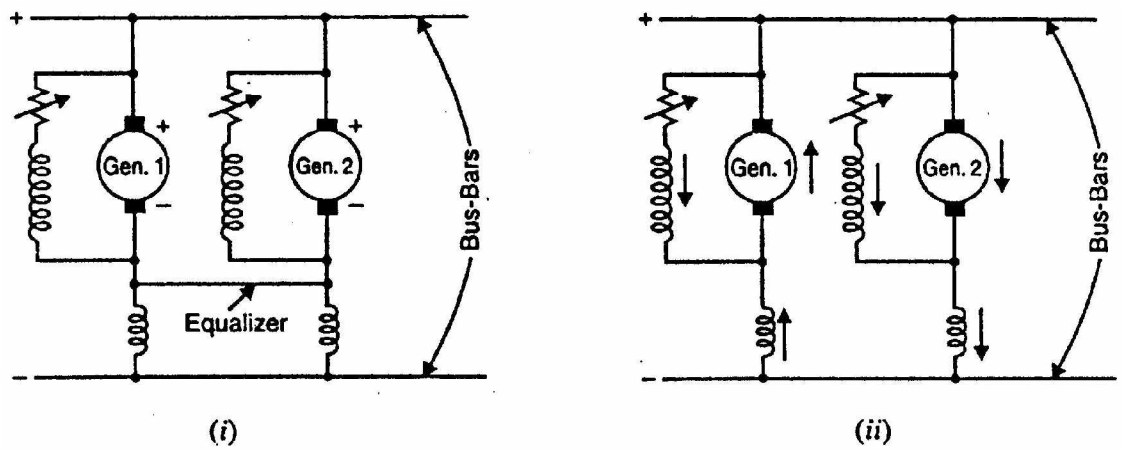

Fig. (3.16)

When the equalizer bar is used, a stabilizing action exist? and neither machine tends to take all the load. To consider this, suppose that current delivered by generator 1 increases [See Fig. 3.16 (i)]. The increased current will not only pass through the series field of generator 1 but also through the equalizer bar and series field of generator 2. Therefore, the voltage of both the machines increases and the generator 2 will take a part of the load.

Chapter (4)

D.C. Motors

Introduction

D. C. motors are seldom used in ordinary applications because all electric supply companies furnish alternating current However, for special applications such as in steel mills, mines and electric trains, it is advantageous to convert alternating current into direct current in order to use d.c. motors. The reason is that speed/torque characteristics of d.c. motors are much more superior to that of a.c. motors. Therefore, it is not surprising to note that for industrial drives, d.c. motors are as popular as 3-phase induction motors. Like d.c. generators, d.c. motors are also of three types viz., series-wound, shunt-wound and compound-wound. The use of a particular motor depends upon the mechanical load it has to drive.

4.1 D.C. Motor Principle

A machine that converts d.c. power into mechanical power is known as a d.c. motor. Its operation is based on the principle that when a current carrying conductor is placed in a magnetic field, the conductor experiences a mechanical force. The direction of this force is given by Fleming's left hand rule and magnitude is given by;

$$F = BI^{a} \quad \text{newtons}$$

Basically, there is no constructional difference between a d.c. motor and a d.c. generator. The same d.c. machine can be run as a generator or motor.

4.2 Working of D.C. Motor

Consider a part of a multipolar d.c. motor as shown in Fig. (4.1). When the terminals of the motor are connected to an external source of d.c. supply:

(i) the field magnets are excited developing alternate N and S poles;

(ii) the armature conductors carry ^currents. All conductors under N-pole carry currents in one direction while all the conductors under S-pole carry currents in the opposite direction.

Suppose the conductors under N-pole carry currents into the plane of the paper and those under S-pole carry currents out of the plane of the paper as shown in Fig.(4.1). Since each armature conductor is carrying current and is placed in the

magnetic field, mechanical force acts on it. Referring to Fig. (4.1) and applying Fleming's left hand rule, it is clear that force on each conductor is tending to rotate the armature in anticlockwise direction. All these forces add together to produce a driving torque which sets the armature rotating. When the conductor moves from one side of a brush to the other, the current in that conductor is reversed and at the same time it comes under the influence of next pole which is of opposite polarity. Consequently, the direction of force on the conductor remains the same.

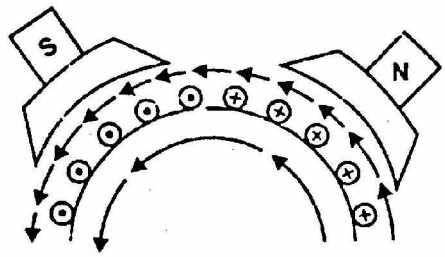

Fig. (4.1)

4.3 Back or Counter E.M.F.

When the armature of a d.c. motor rotates under the influence of the driving torque, the armature conductors move through the magnetic field and hence e.m.f. is induced in them as in a generator The induced e.m.f. acts in opposite direction to the applied voltage V(Lenz's law) and in known as back or counter e.m.f. E_b. The back e.m.f. E_b(= P ϕ ZN/60 A) is always less than the applied voltage V, although this difference is small when the motor is running under normal conditions.

Consider a shunt wound motor shown in Fig. (4.2). When d.c. voltage V is applied across the motor terminals, the field magnets are excited and armature conductors are supplied with current. Therefore, driving torque acts on the armature which begins to rotate. As the armature rotates, back e.m.f. E_b is induced which opposes the applied voltage V. The applied voltage V has to force current through the armature against the back e.m.f. E_b. The electric work done in overcoming and causing the current to flow against E_b is converted into mechanical energy developed in the armature. It follows, therefore, that energy conversion in a d.c. motor is only possible due to the production of back e.m.f. E_b.

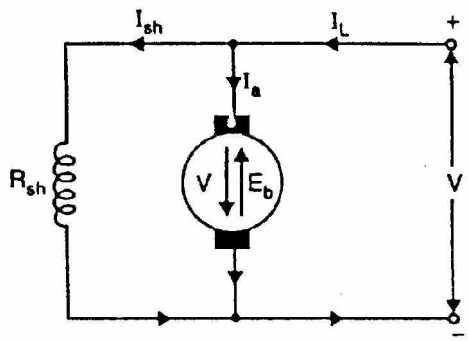

Fig. (4.2)

Net voltage across armature circuit = $V - E_b$

If R_a is the armature circuit resistance, then, $I_a = \dfrac{V - E_b}{R_a}$

Since V and R_a are usually fixed, the value of E_b will determine the current drawn by the motor. If the speed of the motor is high, then back e.m.f. E_b (= P ϕ

ZN/60 A) is large and hence the motor will draw less armature current and vice-versa.

4.4 Significance of Back E.M.F.

The presence of back e.m.f. makes the d.c. motor a self-regulating machine i.e., it makes the motor to draw as much armature current as is just sufficient to develop the torque required by the load.

$$\text{Armature current, } I_a = \frac{V - E_b}{R_a}$$

(i) When the motor is running on no load, small torque is required to overcome the friction and windage losses. Therefore, the armature current I_a is small and the back e.m.f. is nearly equal to the applied voltage.

(ii) If the motor is suddenly loaded, the first effect is to cause the armature to slow down. Therefore, the speed at which the armature conductors move through the field is reduced and hence the back e.m.f. E_b falls. The decreased back e.m.f. allows a larger current to flow through the armature and larger current means increased driving torque. Thus, the driving torque increases as the motor slows down. The motor will stop slowing down when the armature current is just sufficient to produce the increased torque required by the load.

(iii) If the load on the motor is decreased, the driving torque is momentarily in excess of the requirement so that armature is accelerated. As the armature speed increases, the back e.m.f. E_b also increases and causes the armature current I_a to decrease. The motor will stop accelerating when the armature current is just sufficient to produce the reduced torque required by the load.

It follows, therefore, that back e.m.f. in a d.c. motor regulates the flow of armature current i.e., it automatically changes the armature current to meet the load requirement.

4.5 Voltage Equation of D.C. Motor

Let in a d.c. motor (See Fig. 4.3),

V = applied voltage
E_b = back e.m.f.
R_a = armature resistance
I_a = armature current

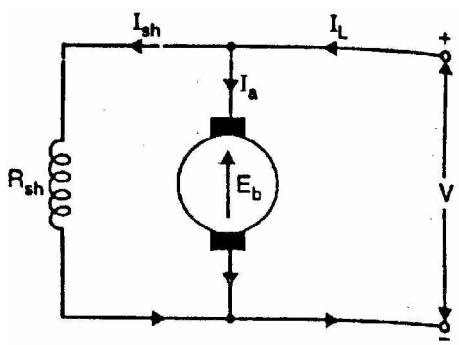

Fig. (4.3)

Since back e.m.f. E_b acts in opposition to the

applied voltage V, the net voltage across the armature circuit is $V - E_b$. The armature current I_a is given by;

$$I_a = \frac{V - E_b}{R_a}$$

or $$V = E_b + I_a R_a \qquad \text{(i)}$$

This is known as voltage equation of the d.c. motor.

4.6 Power Equation

If Eq.(i) above is multiplied by ly throughout, we get,

$$VI_a = E_b I_a + I_a^2 R_a$$

This is known as power equation of the d.c. motor.

VI_a = electric power supplied to armature (armature input)

$E_b I_a$ = power developed by armature (armature output)

$I_a^2 R_a$ = electric power wasted in armature (armature Cu loss)

Thus out of the armature input, a small portion (about 5%) is wasted as $I_a^2 R_a$ and the remaining portion $E_b I_a$ is converted into mechanical power within the armature.

4.7 Condition For Maximum Power

The mechanical power developed by the motor is $P_m = E_b I_a$

Now $$P_m = VI_a - I_a^2 R_a$$

Since, V and R_a are fixed, power developed by the motor depends upon armature current. For maximum power, dP_m/dI_a should be zero.

$$\therefore \quad \frac{dP_m}{dI_a} = V - 2I_a R_a = 0$$

or $$I_a R_a = \frac{V}{2}$$

Now, $$V = E_b + I_a R_a = E_b + \frac{V}{2} \qquad \left[\therefore\ I_a R_a = \frac{V}{2}\right]$$

$$\therefore \quad E_b = \frac{V}{2}$$

Hence mechanical power developed by the motor is maximum when back e.m.f. is equal to half the applied voltage.

Limitations

In practice, we never aim at achieving maximum power due to the following reasons:

(i) The armature current under this condition is very large—much excess of rated current of the machine.

(ii) Half of the input power is wasted in the armature circuit. In fact, if we take into account other losses (iron and mechanical), the efficiency will be well below 50%.

4.8 Types of D.C. Motors

Like generators, there are three types of d.c. motors characterized by the connections of field winding in relation to the armature viz.:

(i) **Shunt-wound motor** in which the field winding is connected in parallel with the armature [See Fig. 4.4]. The current through the shunt field winding is not the same as the armature current. Shunt field windings are designed to produce the necessary m.m.f. by means of a relatively large number of turns of wire having high resistance. Therefore, shunt field current is relatively small compared with the armature current.

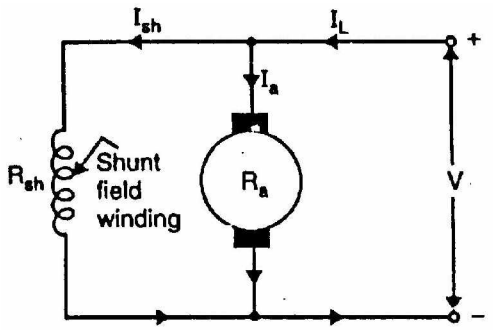

Fig. (4.4)

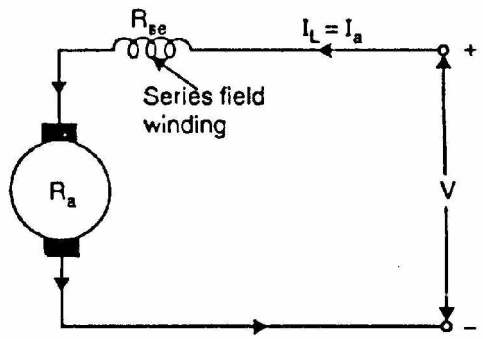

Fig. (4.5)

(ii) **Series-wound motor** in which the field winding is connected in series with the armature [See Fig. 4.5]. Therefore, series field winding carries the armature current. Since the current passing through a series field winding is the same as the armature current, series field windings must be designed with much fewer turns than shunt field windings for the same m.m.f. Therefore, a series field winding has a relatively small number of turns of thick wire and, therefore, will possess a low resistance.

(iii) **Compound-wound motor** which has two field windings; one connected in parallel with the armature and the other in series with it. There are two types of compound motor connections (like generators). When the shunt field winding is directly connected across the armature terminals [See Fig. 4.6], it is called short-shunt connection. When the shunt winding is so

connected that it shunts the series combination of armature and series field [See Fig. 4.7], it is called long-shunt connection.

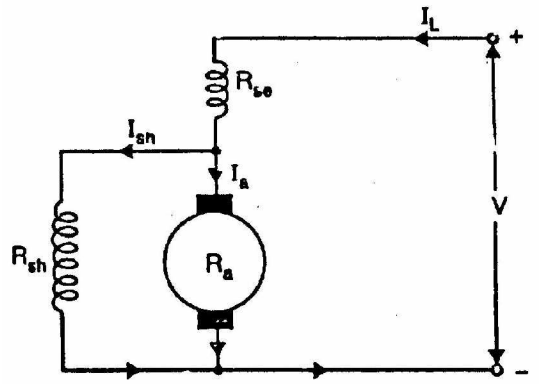

Short-shunt connection

Fig. (4.6)

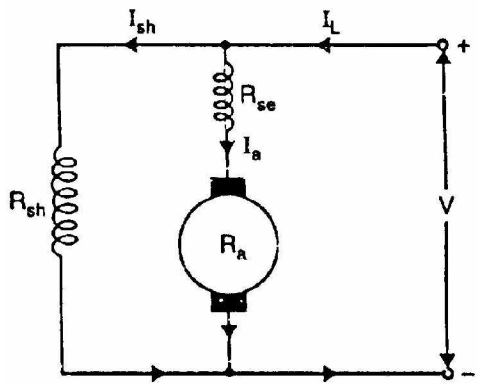

Long-shunt connection

Fig. (4.7)

The compound machines (generators or motors) are always designed so that the flux produced by shunt field winding is considerably larger than the flux produced by the series field winding. Therefore, shunt field in compound machines is the basic dominant factor in the production of the magnetic field in the machine.

4.9 Armature Torque of D.C. Motor

Torque is the turning moment of a force about an axis and is measured by the product of force (F) and radius (r) at right angle to which the force acts i.e.
D.C. Motors 113

$$T = F \times r$$

In a d.c. motor, each conductor is acted upon by a circumferential force F at a distance r, the radius of the armature (Fig. 4.8). Therefore, each conductor exerts a torque, tending to rotate the armature. The sum of the torques due to all armature conductors is known as gross or armature torque (T_a).

Let in a d.c. motor

r = average radius of armature in m
^{a} = effective length of each conductor in m
Z = total number of armature conductors
A = number of parallel paths
i = current in each conductor = I_a/A
B = average flux density in Wb/m2
ϕ = flux per pole in Wb
P = number of poles

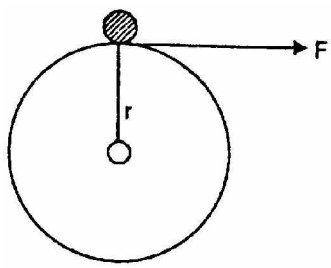

Fig. (4.8)

Force on each conductor, F = B i ^{a} newtons

Torque due to one conductor = $F \times r$ newton- metre

Total armature torque, $T_a = Z\ F\ r$ newton-metre

$= Z\ B\ i\ ^{a}\ r$

Now $i = I_a/A$, $B = \phi/a$ where a is the x-sectional area of flux path per pole at radius r. Clearly, $a = 2\pi r^{a}/P$.

$$\therefore \quad T_a = Z \times \left(\frac{\phi}{2}\right) \times \left(\frac{I_a}{A}\right) \times {}^{a} \times r$$

$$= Z \times \frac{\phi}{2\pi\ r^{a}/P} \times \frac{I_a}{A} \times {}^{a} \times r = \frac{Z\phi I_a P}{2\pi\ A}\ \text{N - m}$$

or $$T_a = 0.159\, Z\phi I_a \left(\frac{P}{A}\right) \text{N - m} \qquad \text{(i)}$$

Since Z, P and A are fixed for a given machine,

$$\therefore \quad T_a \propto \phi I_a$$

Hence torque in a d.c. motor is directly proportional to flux per pole and armature current.

(i) For a shunt motor, flux ϕ is practically constant.

$$\therefore \quad T_a \propto I_a$$

(ii) For a series motor, flux ϕ is directly proportional to armature current I_a provided magnetic saturation does not take place.

$$\therefore \quad T_a \propto I_a^2$$

u
p
t
o

m
a
g
n
e
t
i
c

s
a

t
u
r
a
t
i
o
n

Alternative expression for T_a

$$E_b = \frac{P\phi ZN}{60A}$$

$$\therefore \quad \frac{P\phi Z}{A} = \frac{60 \times E_b}{N}$$

From Eq.(i), we get the expression of T_a as:

$$T_a = 0.159 \times \left(\frac{60 \times E_b}{N} \right) \times I_a$$

or $$T_a = 9.55 \times \frac{E_b I_a}{N} \text{ N - m}$$

Note that developed torque or gross torque means armature torque T_a.

4.10 Shaft Torque (T_{sh})

The torque which is available at the motor shaft for doing useful work is known as shaft torque. It is represented by T_{sh}. Fig. (4.9) illustrates the concept of shaft torque. The total or gross torque T_a developed in the armature of a motor is not available at the shaft because a part of it is lost in overcoming the iron and frictional losses in the motor. Therefore, shaft torque T_{sh} is somewhat less than the armature torque T_a. The difference $T_a - T_{sh}$ is called lost torque.

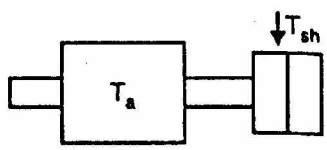

Fig. (4.9)

Clearly, $$T_a - T_{sh} = 9.55 \times \frac{\text{Iron and frictional losses}}{N}$$

For example, if the iron and frictional losses in a motor are 1600 W and the motor runs at 800 r.p.m., then,

$$T_a - T_{sh} = 9.55 \times \frac{1600}{800} = 19.1 \text{ N - m}$$

As stated above, it is the shaft torque T_{sh} that produces the useful output. If the speed of the motor is N r.p.m., then,

$$\text{Output in watts} = \frac{2\pi N T_{sh}}{60}$$

or $$T_{sh} = \frac{\text{Output in watts}}{2\pi\ N/60}\ \text{N - m}$$

or $$T_{sh} = 9.55 \times \frac{\text{Output in watts}}{N}\ \text{N - m} \qquad \left(\text{n}\ \frac{60}{2\pi} = 9.55\right)$$

4.11 Brake Horse Power (B.H.P.)

The horse power developed by the shaft torque is known as brake horsepower (B.H.P.). If the motor is running at N r.p.m. and the shaft torque is T_{sh} newton-metres, then,

W.D./revolution = force x distance moved in 1 revolution

$$= F \times 2\pi\ r = 2\pi \times T_{sh}\ J$$

$$\text{W.D./minute} = 2\pi\ N\ T_{sh}\ J$$

$$\text{W.D./sec.} = \frac{2\pi\ N\ T_{sh}}{60}\ Js^{-1} \text{ or watts} = \frac{2\pi\ N\ T_{sh}}{60 \times 746}\ \text{H.P.}$$

$$\therefore \quad \text{Useful output power} = \frac{2\pi\ N\ T_{sh}}{60 \times 746}\ \text{H.P.}$$

or $$\text{B.H.P.} = \frac{2\pi\ N\ T_{sh}}{60 \times 746}$$

4.12 Speed of a D.C. Motor

$$E_b = V - I_a R_a$$

But $$E_b = \frac{P\phi Z N}{60\ A}$$

$$\therefore \quad \frac{P\phi Z N}{60\ A} = V - I_a R_a$$

or $$N = \frac{(V - I_a R_a)}{\phi}\ \frac{60\ A}{P Z}$$

or $$N = K\frac{(V - I_a R_a)}{\phi} \qquad \text{where} \qquad K = \frac{60 A}{PZ}$$

But $V - I_a R_a = E_a$

$$\therefore \quad N = K\frac{E_b}{\phi}$$

or $$N \propto \frac{E_b}{\phi}$$

Therefore, in a d.c. motor, speed is directly proportional to back e.m.f. E_b and inversely proportional to flux per pole ϕ.

4.13 Speed Relations

If a d.c. motor has initial values of speed, flux per pole and back e.m.f. as N_1, ϕ_1 and E_{b1} respectively and the corresponding final values are N_2, ϕ_2 and E_{b2}, then,

$$N_1 \propto \frac{E_{b1}}{\phi_1} \quad \text{and} \quad N_2 \propto \frac{E_{b2}}{\phi_2}$$

$$\therefore \quad \frac{N_2}{N_1} = \frac{E_{b2}}{E_{b1}} \times \frac{\phi_1}{\phi_2}$$

(i) For a shunt motor, flux practically remains constant so that $\phi_1 = \phi_2$.

$$\therefore \quad \frac{N_2}{N_1} = \frac{E_{b2}}{E_{b1}}$$

(ii) For a series motor, $\phi \propto I_a$ prior to saturation.

$$\therefore \quad \frac{N_2}{N_1} = \frac{E_{b2}}{E_{b1}} \times \frac{I_{a1}}{I_{a2}}$$

where I_{a1} = initial armature current
I_{a2} = final armature current

4.14 Speed Regulation

The speed regulation of a motor is the change in speed from full-load to no-loud and is expressed as a percentage of the speed at full-load i.e.

$$\% \text{ Speed regulation} = \frac{\text{N.L. speed} - \text{F.L.speed}}{\text{F.L. speed}} \times 100$$

$$= \frac{N_0 - N}{N} \times 100$$

where N_0 = No - load .speed
N = Full - load speed

4.15 Torque and Speed of a D.C. Motor

For any motor, the torque and speed are very important factors. When the torque increases, the speed of a motor increases and vice-versa. We have seen that for a d.c. motor;

$$N = K\frac{(V - I_a R_a)}{\phi} = \frac{K\ E_b}{\phi} \qquad \text{(i)}$$

$$T_a \propto \phi I_a \qquad \text{(ii)}$$

If the flux decreases, from Eq.(i), the motor speed increases but from Eq.(ii) the motor torque decreases. This is not possible because the increase in motor speed must be the result of increased torque. Indeed, it is so in this case. When the flux decreases slightly, the armature current increases to a large value. As a result, in spite of the weakened field, the torque is momentarily increased to a high value and will exceed considerably the value corresponding to the load. The surplus torque available causes the motor to accelerate and back e.m.f. ($E_a = P\ \phi\ Z\ N/60\ A$) to rise. Steady conditions of speed will ultimately be achieved when back e.m.f. has risen to such a value that armature current [$I_a = (V - E_a)/R_a$] develops torque just sufficient to drive the load.

Illustration

Let us illustrate the above point with a numerical example. Suppose a 400 V shunt motor is running at 600 r.p.m., taking an armature current of 50 A. The armature resistance is 0.28 Ω. Let us see the effect of sudden reduction of flux by 5% on the motor.

Initially (prior to weakening of field), we have,

$$E_a = V - I_a R_a = 400 - 50 \times 0.28 = 386 \text{ volts}$$

We know that $E_b \propto \phi N$. If the flux is reduced suddenly, $E_b \propto \phi$ because inertia of heavy armature prevents any rapid change in speed. It follows that when the flux is reduced by 5%, the generated e.m.f. must follow suit. Thus at the instant of reduction of flux, $E'_b = 0.95 \times 386 = 366.7$ volts.

Instantaneous armature current is

$$I'_a = \frac{V - E'_b}{R_a} = \frac{400 - 366.7}{0.28} = 118.9 \text{ A}$$

Note that a sudden reduction of 5% in the flux has caused the armature current to increase about 2.5 times the initial value. This will result in the production of high value of torque. However, soon the steady conditions will prevail. This will depend on the system inertia; the more rapidly the motor can alter the speed, the sooner the e.m.f. rises and the armature current falls.

4.16 Armature Reaction in D.C. Motors

As in a d.c. generator, armature reaction also occurs in a d.c. motor. This is expected because when current flows through the armature conductors of a d.c. motor, it produces flux (armature flux) which lets on the flux produced by the main poles. For a motor with the same polarity and direction of rotation as is for generator, the direction of armature reaction field is reversed.

(i) In a generator, the armature current flows in the direction of the induced e.m.f. (i.e. generated e.m.f. E_g) whereas in a motor, the armature current flows against the induced e.m.f. (i.e. back e.m.f. E_b). Therefore, it should be expected that for the same direction of rotation and field polarity, the armature flux of the motor will be in the opposite direction to that of the generator. Hence instead of the main flux being distorted in the direction of rotation as in a generator, it is distorted opposite to the direction of rotation. We can conclude that:

Armature reaction in a d.c. generator weakens the jinx at leading pole tips and strengthens the flux at trailing pole tips while the armature reaction in a d. c. motor produces the opposite effect.

(ii) In case of a d.c. generator, with brushes along G.N.A. and no commutating poles used, the brushes must be shifted in the direction of rotation (forward lead) for satisfactory commutation. However, in case of a d.c. motor, the brushes are given a negative lead i.e., they are shifted against the direction of rotation.

With no commutating poles used, the brushes are given a forward lead in a d.c. generator and backward lead in a d.c. motor.

(iii) By using commutating poles (compoles), a d.c. machine can be operated with fixed brush positions for all conditions of load. Since commutating poles windings carry the armature current, then, when a machine changes from generator to motor (with consequent reversal of current), the polarities of commutating poles must be of opposite sign.

Therefore, in a d.c. motor, the commutating poles must have the same polarity as the main poles directly back of them. This is the opposite of the corresponding relation in a d.c. generator.

4.17 Commutation in D.C. Motors

Since the armature of a motor is the same as that of a generator, the current from the supply line must divide and pass through the paths of the armature windings.

In order to produce unidirectional force (or torque) on the armature conductors of a motor, the conductors under any pole must carry the current in the same direction at all times. This is illustrated in Fig. (4.10). In this case, the current flows away from the observer in the conductors under the N-pole and towards the observer in the conductors under the S-pole. Therefore, when a conductor moves from the influence of N-pole to that of S-pole, the direction of current in the conductor must be reversed. This is termed as commutation. The function of the commutator and the brush gear in a d.c. motor is to cause the reversal of current in a conductor as it moves from one side of a brush to the other. For good commutation, the following points may be noted:

(i) If a motor does not have commutating poles (compoles), the brushes must be given a negative lead i.e., they must be shifted from G.N.A. against the direction of rotation of, the motor.

(ii) By using interpoles, a d.c. motor can be operated with fixed brush positions for all conditions of load. For a d.c. motor, the commutating poles must have the same polarity as the main poles directly back of them. This is the opposite of the corresponding relation in a d.c. generator.

Note. A d.c. machine may be used as a motor or a generator without changing the commutating poles connections. When the operation of a d.c. machine changes from generator to motor, the direction of the armature current reverses. Since commutating poles winding carries armature current, the polarity of commutating pole reverses automatically to the correct polarity.

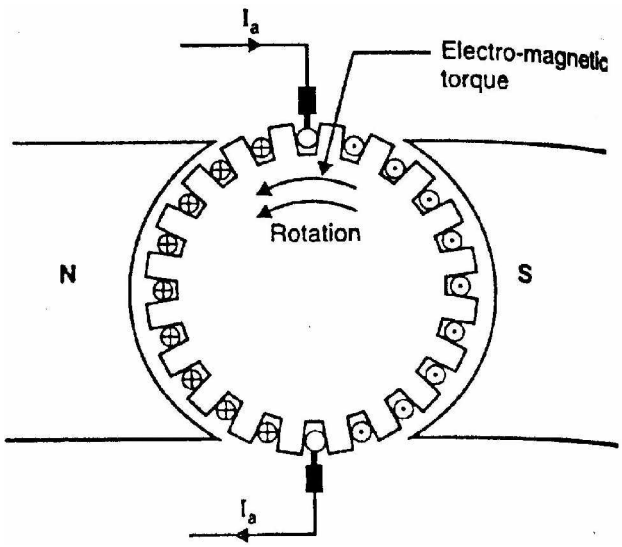

Fig. (4.10)

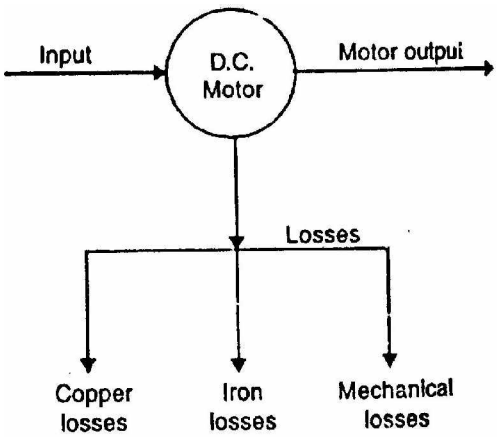

Fig. (4.11)

4.18 Losses in a D.C. Motor

The losses occurring in a d.c. motor are the same as in a d.c. generator [See Sec. 1.26]. These are [See Fig. 4.11]:

(i) copper losses (n) Iron losses or magnetic losses
(ii) mechanical losses

As in a generator, these losses cause (a) an increase of machine temperature and (b) reduction in the efficiency of the d.c. motor.

The following points may be noted:

(i) Apart from armature Cu loss, field Cu loss and brush contact loss, Cu losses also occur in interpoles (commutating poles) and compensating windings. Since these windings carry armature current (I_a),

Loss in interpole winding = $I_a^2 \times$ Resistance of interpole winding

Loss in compensating winding = $I_a^2 \times$ Resistance of compensating winding

(ii) Since d.c. machines (generators or motors) are generally operated at constant flux density and constant speed, the iron losses are nearly constant.

(iii) The mechanical losses (i.e. friction and windage) vary as the cube of the speed of rotation of the d.c. machine (generator or motor). Since d.c. machines are generally operated at constant speed, mechanical losses are considered to be constant.

4.19 Efficiency of a D.C. Motor

Like a d.c. generator, the efficiency of a d.c. motor is the ratio of output power to the input power i.e.

$$\text{Efficiency, } \eta = \frac{\text{output}}{\text{input}} \times 100 = \frac{\text{output}}{\text{output} + \text{losses}} \times 100$$

As for a generator (See Sec. 1.29), the efficiency of a d.c. motor will be maximum when:

Variable losses = Constant losses

Therefore, the efficiency curve of a d.c. motor is similar in shape to that of a d.c. generator.

4.20 Power Stages

The power stages in a d.c. motor are represented diagrammatically in Fig. (4.12).

A – B = Copper losses

B – C = Iron and friction losses

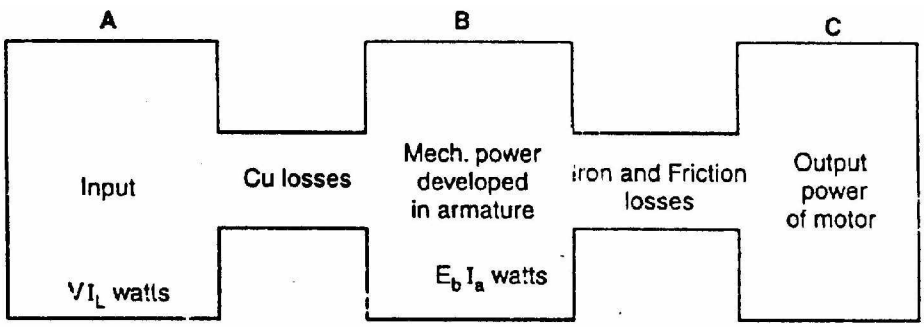

Fig. (4.12)

Overall efficiency, $\eta_c = C/A$
Electrical efficiency, $\eta_e = B/A$
Mechanical efficiency, $\eta_m = C/B$

4.21 D.C. Motor Characteristics

There are three principal types of d.c. motors viz., shunt motors, series motors and compound motors. Both shunt and series types have only one field winding wound on the core of each pole of the motor. The compound type has two separate field windings wound on the core of each pole. The performance of a d.c. motor can be judged from its characteristic curves known as motor characteristics, following are the three important characteristics of a d.c. motor:

(i) Torque and Armature current characteristic (T_a/I_a)

It is the curve between armature torque T_a and armature current I_a of a d.c. motor. It is also known as electrical characteristic of the motor.

(ii) Speed and armature current characteristic (N/i_a)

It is the curve between speed N and armature current I_a of a d.c. motor. It is very important characteristic as it is often the deciding factor in the selection of the motor for a particular application.

(iii) Speed and torque characteristic (N/T_a)

It is the curve between speed N and armature torque T_a of a d.c. motor. It is also known as mechanical characteristic.

4.22 Characteristics of Shunt Motors

Fig. (4.13) shows the connections of a d.c. shunt motor. The field current I_{sh} is constant since the field winding is directly connected to the supply voltage V which is assumed to be constant. Hence, the flux in a shunt motor is approximately constant.

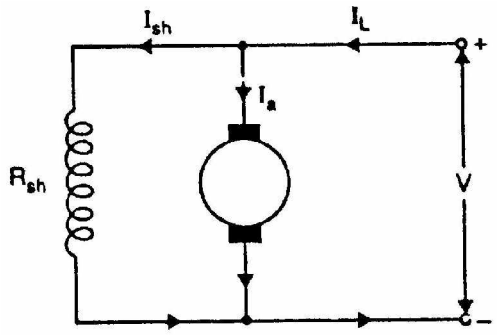

Fig. (4.13)

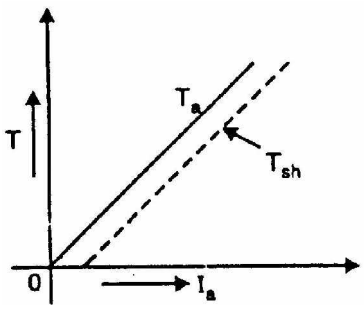

Fig. (4.14)

(i) **T_a/I_a Characteristic.** We know that in a d.c. motor,

$$T_a \propto \phi I_a$$

Since the motor is operating from a constant supply voltage, flux ϕ is constant (neglecting armature reaction).

$$\therefore \quad T_a \propto I_a$$

Hence T_a/I_a characteristic is a straight line passing through the origin as shown in Fig. (4.14). The shaft torque (T_{sh}) is less than T_a and is shown by a dotted line. It is clear from the curve that a very large current is required to start a heavy load. Therefore, a shunt motor should not be started on heavy load.

(ii) **N/I_a Characteristic.** The speed N of a. d.c. motor is given by;

$$N \propto \frac{E_b}{\phi}$$

The flux ϕ and back e.m.f. E_b in a shunt motor are almost constant under normal conditions. Therefore, speed of a shunt motor will remain constant as the armature current varies (dotted line AB in Fig. 4.15). Strictly speaking, when load is increased, E_b (= $V - I_aR_a$) and ϕ decrease due to the armature resistance drop and armature reaction respectively. However, E_b decreases slightly more than ϕ so that the speed of the motor decreases slightly with load (line AC).

(iii) **N/T_a Characteristic**. The curve is obtained by plotting the values of N and T_a for various armature currents (See Fig. 4.16). It may be seen that speed falls somewhat as the load torque increases.

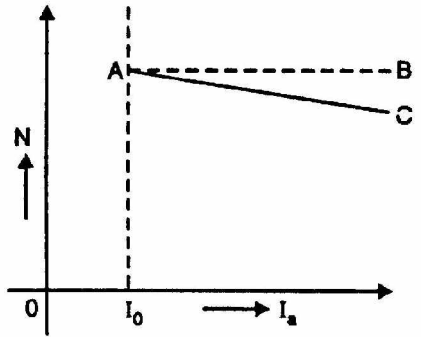

Fig. (4.15)

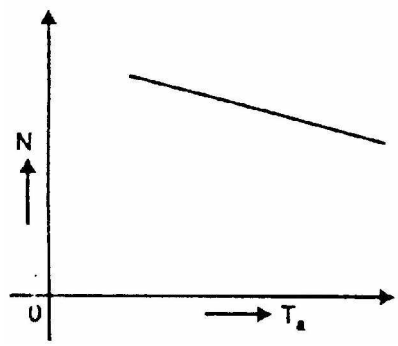

Fig. (4.16)

Conclusions

Following two important conclusions are drawn from the above characteristics:

(i) There is slight change in the speed of a shunt motor from no-load to full-load. Hence, it is essentially a constant-speed motor.

(ii) The starting torque is not high because $T_a \propto I_a$.

4.23 Characteristics of Series Motors

Fig. (4.17) shows the connections of a series motor. Note that current passing through the field winding is the same as that in the armature. If the mechanical load on the motor increases, the armature current also increases. Hence, the flux in a series motor increases with the increase in armature current and vice-versa.

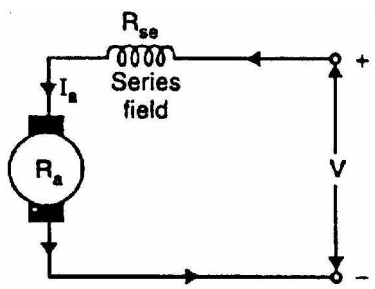

Fig. (4.17)

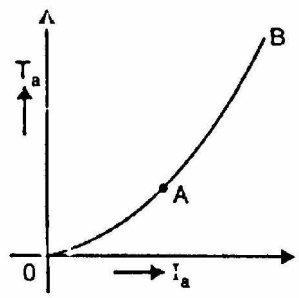

Fig. (4.18)

(i) **T_a/I_a Characteristic**. We know that:

$$T_a \propto \phi I_a$$

Upto magnetic saturation, $\phi \propto I_a$ so that $T_a \propto I_a^2$

After magnetic saturation, ϕ is constant so that $T_a \propto I_a$

Thus upto magnetic saturation, the armature torque is directly proportional to the square of armature current. If I_a is doubled, T_a is almost quadrupled.

Therefore, T_a/I_a curve upto magnetic saturation is a parabola (portion OA of the curve in Fig. 4.18). However, after magnetic saturation, torque is directly proportional to the armature current. Therefore, T_a/I_a curve after magnetic saturation is a straight line (portion AB of the curve).

It may be seen that in the initial portion of the curve (i.e. upto magnetic saturation), $T_a \propto I_a^2$. This means that starting torque of a d.c. series motor will be very high as compared to a shunt motor (where that $T_a \propto I_a$).

(ii) **N/I_a Characteristic.** The speed N of a series motor is given by;

$$N \propto \frac{E_b}{\phi} \qquad \text{where} \qquad E_b = V - I_a(R_a + R_{se})$$

When the armature current increases, the back e.m.f. E_d decreases due to $I_a(R_a + R_{se})$ drop while the flux ϕ increases. However, $I_a(R_a + R_{se})$ drop is quite small under normal conditions and may be neglected.

$$\therefore \quad N \propto \frac{1}{\phi}$$

$$\propto \frac{1}{I_a} \quad \text{upto magnetic saturation}$$

Thus, upto magnetic saturation, the N/I_a curve follows the hyperbolic path as shown in Fig. (4.19). After saturation, the flux becomes constant and so does the speed.

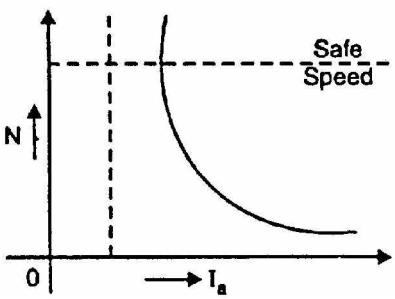

Fig. (4.19)

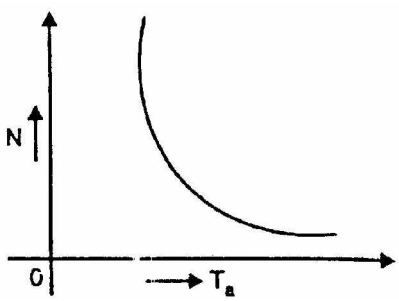

Fig. (4.20)

(iii) **N/T_a Characteristic**. The N/T_a characteristic of a series motor is shown in Fig. (4.20). It is clear that series motor develops high torque at low speed and vice-versa. It is because an increase in torque requires an increase in armature current, which is also the field current. The result is that flux is strengthened and hence the speed drops (**n** $N \propto 1/\phi$). Reverse happens should the torque be low.

Conclusions

Following three important conclusions are drawn from the above characteristics of series motors:

(i) It has a high starting torque because initially $T_a \propto I_a^2$.

(ii) It is a variable speed motor (See N/I_a curve in Fig. 4.19) i.e., it automatically adjusts the speed as the load changes. Thus if the load decreases, its speed is automatically raised and vice-versa.

(iii) At no-load, the armature current is very small and so is the flux. Hence, the speed rises to an excessive high value (n $N \propto 1/\phi$). This is dangerous for the machine which may be destroyed due to centrifugal forces set up in the rotating parts. Therefore, a series motor should never be started on no-load. However, to start a series motor, mechanical load is first put and then the motor is started.

Note. The minimum load on a d.c. series motor should be great enough to keep the speed within limits. If the speed becomes dangerously high, then motor must be disconnected from the supply.

4.24 Compound Motors

A compound motor has both series field and shunt field. The shunt field is always stronger than the series field. Compound motors are of two types:

(i) *Cumulative-compound motors* in which series field aids the shunt field.

(ii) *Differential-compound motors* in which series field opposes the shunt field.

Differential compound motors are rarely used due to their poor torque characteristics at heavy loads.

4.25 Characteristics of Cumulative Compound Motors

Fig. (4.21) shows the connections of a cumulative-compound motor. Each pole carries a series as well as shunt field winding; the series field aiding the shunt field.

(i) **T_a/I_a Characteristic**. As the load increases, the series field increases but shunt field strength remains constant. Consequently, total flux is increased and hence the armature torque (n $T_a \propto \phi I_a$). It may be noted that torque of a cumulative-compound motor is greater than that of shunt motor for a given armature current due to series field [See Fig. 4.22].

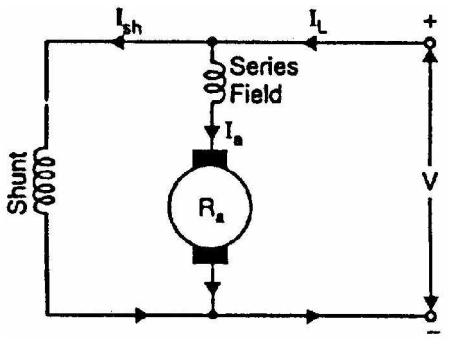

Fig. (4.21)

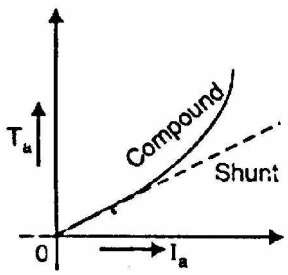

Fig. (4.22)

(ii) **N/I_a Characteristic**. As explained above, as the lead increases, the flux per pole also increases. Consequently, the speed ($N \propto 1/\phi$) of the motor tails as the load increases (See Fig. 4.23). It may be noted that as the load is added, the increased amount of flux causes the speed to decrease more than does the speed of a shunt motor. Thus the speed regulation of a cumulative compound motor is poorer than that of a shunt motor.

Note: Due to shunt field, the motor has a definite no load speed and can be operated safely at no-load.

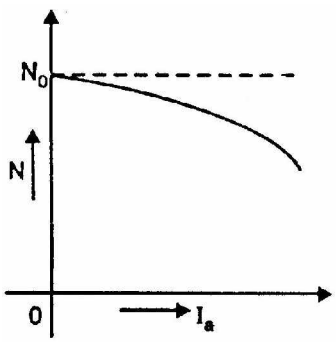

Fig. (4.23)

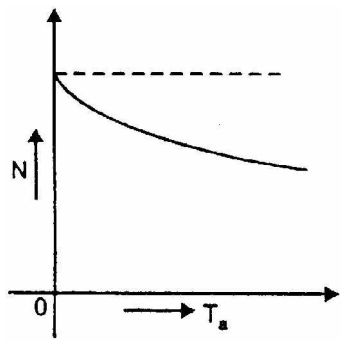

Fig. (4.24)

(iii) **N/T_a Characteristic**. Fig. (4.24) shows N/T_a characteristic of a cumulative compound motor. For a given armature current, the torque of a cumulative compound motor is more than that of a shunt motor but less than that of a series motor.

Conclusions

A cumulative compound motor has characteristics intermediate between series and shunt motors.

(i) Due to the presence of shunt field, the motor is prevented from running away at no-load.

(ii) Due to the presence of series field, the starting torque is increased.

4.26 Comparison of Three Types of Motors

(i) The speed regulation of a shunt motor is better than that of a series motor.

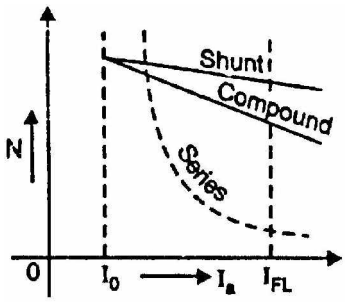

Fig. (4.25)

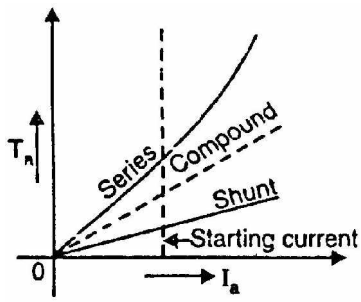

Fig. (4.26)

However, speed regulation of a cumulative compound motor lies between shunt and series motors (See Fig. 4.25).

(ii) For a given armature current, the starting torque of a series motor is more than that of a shunt motor. However, the starting torque of a cumulative compound motor lies between series and shunt motors (See Fig. 4.26).

(iii) Both shunt and cumulative compound motors have definite no-load speed. However, a series motor has dangerously high speed at no-load.

4.27 Applications of D.C. Motors

1. Shunt motors

The characteristics of a shunt motor reveal that it is an approximately constant speed motor. It is, therefore, used

(i) where the speed is required to remain almost constant from no-load to full-load

(ii) where the load has 10 be driven at a number of speeds and any one of which is required to remain nearly constant

Industrial use: Lathes, drills, boring mills, shapers, spinning and weaving machines etc.

2. Series motors

It is a variable speed motor i.e., speed is low at high torque and vice-versa. However, at light or no-load, the motor tends to attain dangerously high speed. The motor has a high starting torque. It is, therefore, used

(i) where large starting torque is required e.g., in elevators and electric traction

(ii) where the load is subjected to heavy fluctuations and the speed is automatically required to reduce at high torques and vice-versa

Industrial use: Electric traction, cranes, elevators, air compressors, vacuum cleaners, hair drier, sewing machines etc.

3. Compound motors

Differential-compound motors are rarely used because of their poor torque characteristics. However, cumulative-compound motors are used where a fairly constant speed is required with irregular loads or suddenly applied heavy loads.

Industrial use: Presses, shears, reciprocating machines etc.

4.28 Troubles in D.C. Motors

Several troubles may arise in a d.c. motor and a few of them are discussed below:

1. Failure to start

This may be due to (i) ground fault (ii) open or short-circuit fault (iii) wrong connections (iv) too low supply voltage (v) frozen bearing or (vi) excessive load.

2. Sparking at brushes

This may be due to (i) troubles in brushes (ii) troubles in commutator (iii) troubles in armature or (iv) excessive load.

(i) Brush troubles may arise due to insufficient contact surface, too short a brush, too little spring tension or wrong brush setting.

(ii) Commutator troubles may be due to dirt on the commutator, high mica, rough surface or eccentricity.

(iii) Armature troubles may be due to an open armature coil. An open armature coil will cause sparking each time the open coil passes the brush. The location of this open coil is noticeable by a burnt line between segments connecting the coil.

3. Vibrations and pounding noises

These maybe due to (i) worn bearings (ii) loose parts (iii) rotating parts hitting stationary parts (iv) armature unbalanced (v) misalignment of machine (vi) loose coupling etc.

4. Overheating

The overheating of motor may be due to (i) overloads (ii) sparking at the brushes (iii) short-circuited armature or field coils (iv) too frequent starts or reversals (v) poor ventilation (vi) incorrect voltage.

Chapter (5)

Speed Control of D.C. Motors

Introduction

Although a far greater percentage of electric motors in service are a.c. motors, the d.c. motor is of considerable industrial importance. The principal advantage of a d.c. motor is that its speed can be changed over a wide range by a variety of simple methods. Such a fine speed control is generally not possible with a.c. motors. In fact, fine speed control is one of the reasons for the strong competitive position of d.c. motors in the modem industrial applications. In this chapter, we shall discuss the various methods of-speed control of d.c. motors.

5.1 Speed Control of D.C. Motors

The speed of a d.c. motor is given by:

$$N \propto \frac{E_b}{\phi}$$

or $$N = K\frac{(V - I_a R)}{\phi} \text{ r.p.m.} \qquad \text{(i)}$$

where $R = R_a$ for shunt motor
$= R_a + R_{se}$. for series motor

From exp. (i), it is clear that there are three main methods of controlling the speed of a d.c. motor, namely:

(i) By varying the flux per pole (ϕ). This is known as flux control method.
(ii) By varying the resistance in the armature circuit. This is known as armature control method.
(iii) By varying the applied voltage V. This is known as voltage control method.

5.2 Speed Control of D.C. Shunt Motors

The speed of a shunt motor can be changed by (i) flux control method (ii) armature control method (iii) voltage control method. The first method (i.e. flux control method) is frequently used because it is simple and inexpensive.

1. Flux control method

It is based on the fact that by varying the flux ϕ, the motor speed ($N \propto 1/\phi$) can be changed and hence the name flux control method. In this method, a variable resistance (known as shunt field rheostat) is placed in series with shunt field winding as shown in Fig. (5.1).

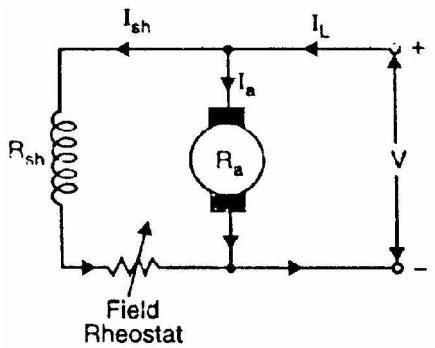

Fig. (5.1)

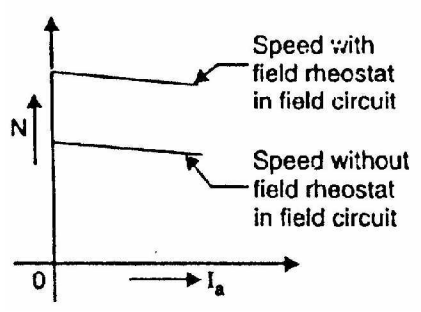

Fig. (5.2)

The shunt field rheostat reduces the shunt field current I_{sh} and hence the flux ϕ. Therefore, we can only raise the speed of the motor above the normal speed (See Fig. 5.2). Generally, this method permits to increase the speed in the ratio 3:1. Wider speed ranges tend to produce instability and poor commutation.

Advantages

(i) This is an easy and convenient method.
(ii) It is an inexpensive method since very little power is wasted in the shunt field rheostat due to relatively small value of I_{sh}.
(iii) The speed control exercised by this method is independent of load on the machine.

Disadvantages

(i) Only speeds higher than the normal speed can be obtained since the total field circuit resistance cannot be reduced below R_{sh}—the shunt field winding resistance.
(ii) There is a limit to the maximum speed obtainable by this method. It is because if the flux is too much weakened, commutation becomes poorer.

Note. The field of a shunt motor in operation should never be opened because its speed will increase to an extremely high value.

2. Armature control method

This method is based on the fact that by varying the voltage available across the armature, the back e.m.f and hence the speed of the motor can be changed. This

is done by inserting a variable resistance R_C (known as controller resistance) in series with the armature as shown in Fig. (5.3).

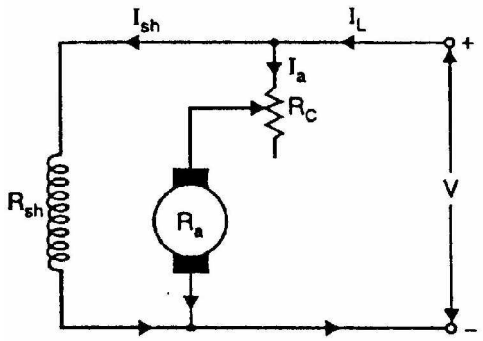

Fig. (5.3)

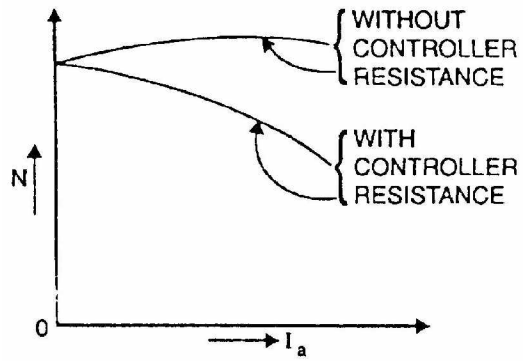

Fig. (5.4)

$$N \propto V - I_a(R_a + R_C)$$

where R_C = controller resistance

Due to voltage drop in the controller resistance, the back e.m.f. (E_b) is decreased. Since $N \propto E_b$, the speed of the motor is reduced. The highest speed obtainable is lhat corresponding to $R_C = 0$ i.e., normal speed. Hence, this method can only provide speeds below the normal speed (See Fig. 5.4).

Disadvantages

(i) A large amount of power is wasted in the controller resistance since it carries full armature current I_a.
(ii) The speed varies widely with load since the speed depends upon the voltage drop in the controller resistance and hence on the armature current demanded by the load.
(iii) The output and efficiency of the motor are reduced.
(iv) This method results in poor speed regulation.

Due to above disadvantages, this method is seldom used to control tie speed of shunt motors.

Note. The armature control method is a very common method for the speed control of d.c. series motors. The disadvantage of poor speed regulation is not important in a series motor which is used only where varying speed service is required.

3. Voltage control method

In this method, the voltage source supplying the field current is different from that which supplies the armature. This method avoids the disadvantages of poor speed regulation and low efficiency as in armature control method. However, it

is quite expensive. Therefore, this method of speed control is employed for large size motors where efficiency is of great importance.

(i) **Multiple voltage control**. In this method, the shunt field of the motor is connected permanently across a-fixed voltage source. The armature can be connected across several different voltages through a suitable switchgear. In this way, voltage applied across the armature can be changed. The speed will be approximately proportional to the voltage applied across the armature. Intermediate speeds can be obtained by means of a shunt field regulator.

(ii) **Ward-Leonard system**. In this method, the adjustable voltage for the armature is obtained from an adjustable-voltage generator while the field circuit is supplied from a separate source. This is illustrated in Fig. (5.5). The armature of the shunt motor M (whose speed is to be controlled) is connected directly to a d.c. generator G driven by a constant-speed a.c. motor A. The field of the shunt motor is supplied from a constant-voltage exciter E. The field of the generator G is also supplied from the exciter E. The voltage of the generator G can be varied by means of its field regulator. By reversing the field current of generator G by controller FC, the voltage applied to the motor may be reversed. Sometimes, a field regulator is included in the field circuit of shunt motor M for additional speed adjustment. With this method, the motor may be operated at any speed upto its maximum speed.

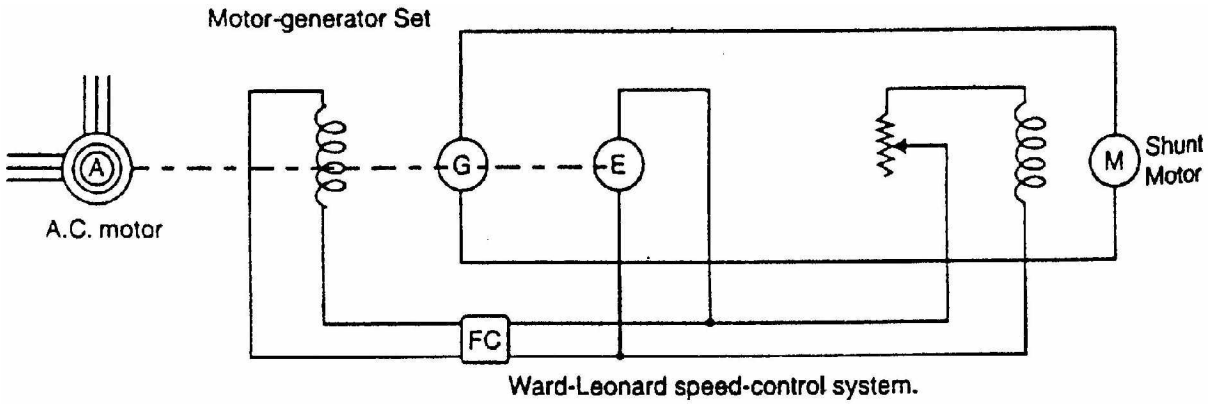

Fig. (5.5)

Advantages

(a) The speed of the motor can be adjusted through a wide range without resistance losses which results in high efficiency.

(b) The motor can be brought to a standstill quickly, simply by rapidly reducing the voltage of generator G. When the generator voltage is reduced below the back e.m.f. of the motor, this back e.m.f. sends current through the generator armature, establishing dynamic braking. While this takes

place, the generator G operates as a motor driving motor A which returns power to the line.

(c) This method is used for the speed control of large motors when a d.c. supply is not available.

The disadvantage of the method is that a special motor-generator set is required for each motor and the losses in this set are high if the motor is operating under light loads for long periods.

5.3 Speed Control of D.C. Series Motors

The speed control of d.c. series motors can be obtained by (i) flux control method (ii) armature-resistance control method. The latter method is mostly used.

1. Flux control method

In this method, the flux produced by the series motor is varied and hence the speed. The variation of flux can be achieved in the following ways:

(i) **Field divertcrs**. In this method, a variable resistance (called field diverter) is connected in parallel with series field winding as shown in Fig. (5.6). Its effect is to shunt some portion of the line current from the series field winding, thus weakening the field and increasing the speed (n N ∝ 1/ϕ). The lowest speed obtainable is that corresponding to zero current in the diverter (i.e., diverter is open). Obviously, the lowest speed obtainable is the normal speed of the motor. Consequently, this method can only provide speeds above the normal speed. The series field diverter method is often employed in traction work.

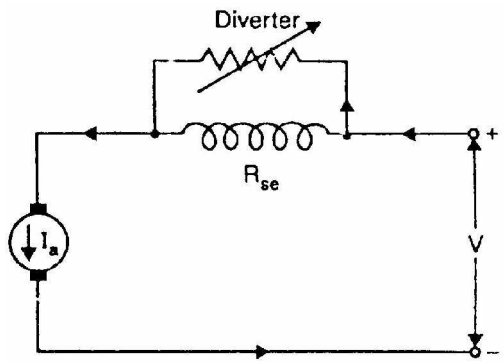

Fig. (5.6)

(ii) **Armature diverter**. In order to obtain speeds below the normal speed, a variable resistance (called armature diverter) is connected in parallel with the armature as shown in Fig. (5.7). The diverter shunts some of the line current, thus reducing the armature current. Now for a given load, if I_a is decreased, the flux ϕ must increase (n T ∝ ϕI_a). Since N ∝ 1/ϕ, the motor speed is decreased. By adjusting the armature diverter, any speed lower than the normal speed can be obtained.

(iii) **Tapped field control**. In this method, the flux is reduced (and hence speed is increased) by decreasing the number of turns of the series field winding as shown in Fig. (5.8). The switch S can short circuit any part of the field

winding, thus decreasing the flux and raising the speed. With full turns of the field winding, the motor runs at normal speed and as the field turns are cut out, speeds higher than normal speed are achieved.

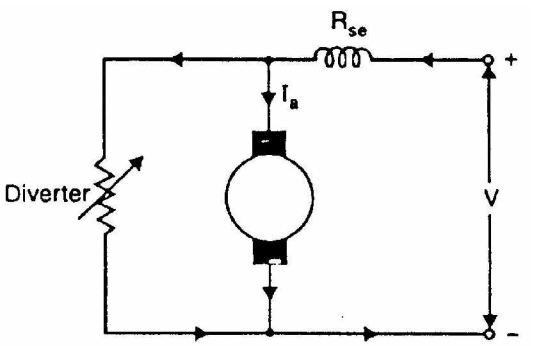

Fig. (5.7)

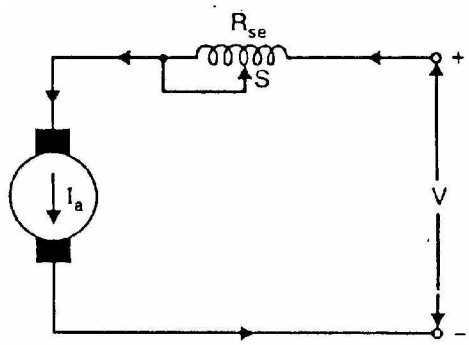

Fig. (5.8)

(iv) **Paralleling field coils**. This method is usually employed in the case of fan motors. By regrouping the field coils as shown in Fig. (5.9), several fixed speeds can be obtained.

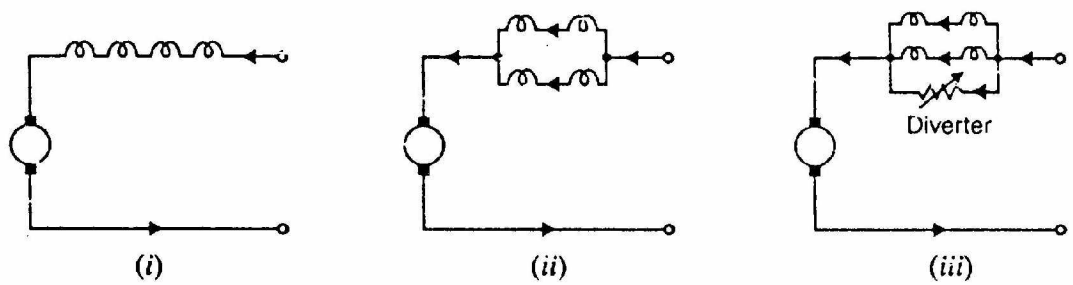

Fig. (5.9)

2. Armature-resistance control

In this method, a variable resistance is directly connected in series with the supply to the complete motor as shown in Fig. (5.10). This reduces the voltage available across the armature and hence the speed falls. By changing the value of variable resistance, any speed below the normal speed can be obtained. This is the most common method employed to control the speed of d.c. series motors. Although this method has poor speed regulation, this has no significance for series motors because they are used in varying speed applications. The loss of power in the series resistance for many applications of series motors is not too serious since in these applications,

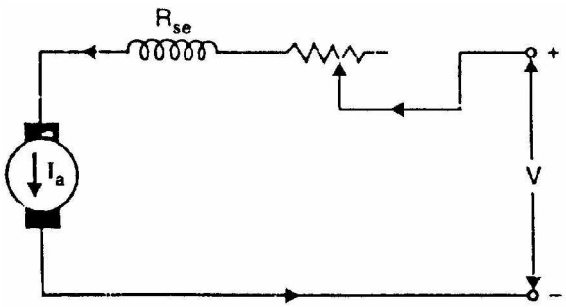

Fig. (5.10)

the control is utilized for a large portion of the time for reducing the speed under light-load conditions and is only used intermittently when the motor is carrying full-load.

5.4 Series-Parallel Control

Another method used for the speed control of d.c. series motors is the series-parallel method. In this system which is widely used in traction system, two (or more) similar d.c. series motors are mechanically coupled to the same load.

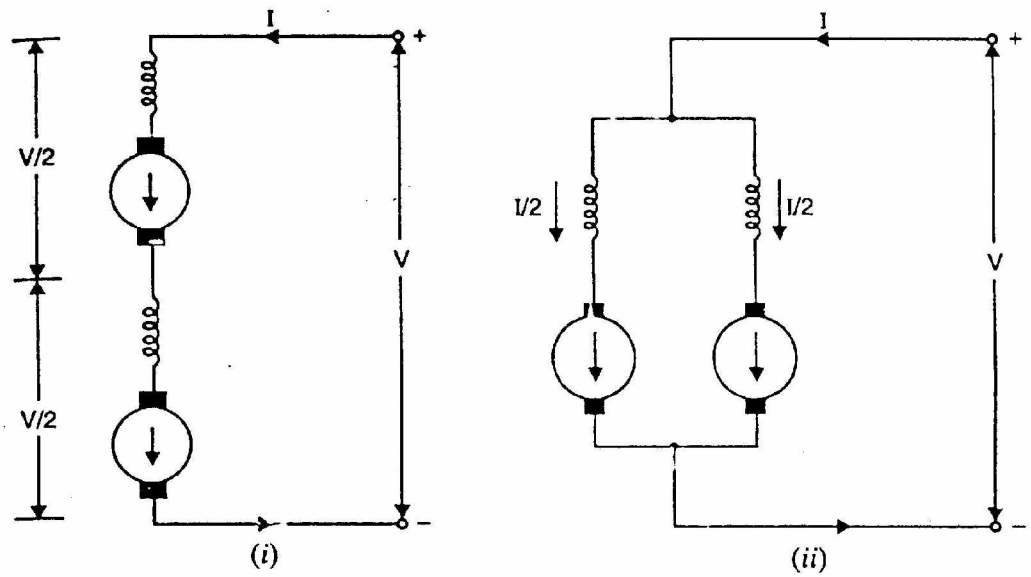

Fig. (5.11)

When the motors are connected in series [See Fig. 5.11 (i)], each motor armature will receive one-half the normal voltage. Therefore, the speed will be low. When the motors are connected in parallel, each motor armature receives the normal voltage and the speed is high [See Fig. 5.11 (ii)]. Thus we can obtain two speeds. Note that for the same load on the pair of motors, the system would run approximately four times the speed when the machines are in parallel as when they are in series.

Series-parallel and resistance control

In electric traction, series-parallel method is usually combined with resistance method of control. In the simplest case, two d.c. series motors are coupled mechanically and drive the same vehicle.

(i) At standstill, the motors are connected is series via a starting rheostat. The motors are started up in series with each other and starting resistance is cut out step by step to increase the speed. When all the resistance is cut out (See Fig. 5.12), the voltage applied to each motor is about one-half of the line voltage. The speed is then about one-half of what it would be if the full line voltage were applied to each motor.

(ii) To increase the speed further, the two motors are connected in parallel and at the same time the starting resistance is connected in series with the combination (See Fig. 5.12). The starting resistance is again cut out step by step until full speed is attained. Then field control is introduced.

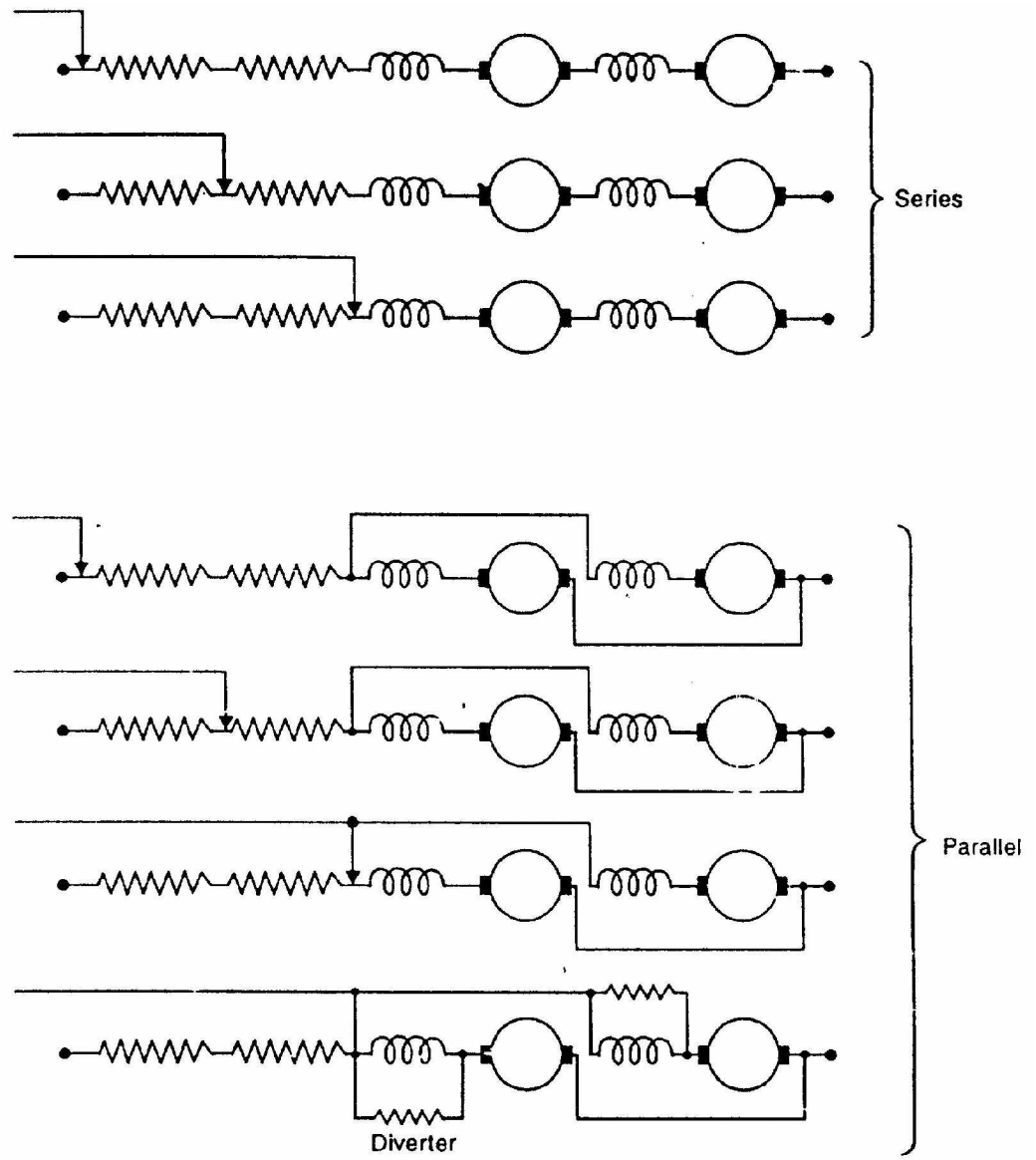

Fig. (5.12)

5.5 Electric Braking

Sometimes it is desirable to stop a d.c. motor quickly. This may be necessary in case of emergency or to save time if the motor is being used for frequently repeated operations. The motor and its load may be brought to rest by using either (i) mechanical (friction) braking or (ii) electric braking. In mechanical braking, the motor is stopped due to the friction between the moving parts of the motor and the brake shoe i.e. kinetic energy of the motor is dissipated as heat. Mechanical braking has several disadvantages including non-smooth stop and greater stopping time.

In electric braking, the kinetic energy of the moving parts (i.e., motor) is converted into electrical energy which is dissipated in a resistance as heat or alternativley, it is returned to the supply source (Regenerative braking). For d.c. shunt as well as series motors, the following three methods of electric braking are used:

(i) Rheostatic or Dynamic braking
(ii) Plugging
(iii) Regenerative braking

It may be noted that electric braking cannot hold the motor stationary and mechanical braking is necessary. However, the main advantage of using electric braking is that it reduces the wear and tear of mechanical brakes and cuts down the stopping time considerably due to high braking retardation.

(i) Rheostatic or Dynamic braking

In this method, the armature of the running motor is disconnected from the supply and is connected across a variable resistance R. However, the field winding is left connected to the supply. The armature, while slowing down, rotates in a strong magnetic field and, therefore, operates as a generator, sending a large current through resistance R. This causes the energy possessed by the rotating armature to be dissipated quickly as heat in the resistance. As a result, the motor is brought to standstill quickly.

Fig. (5.13) (i) shows dynamic braking of a shunt motor. The braking torque can be controlled by varying the resistance R. If the value of R is decreased as the motor speed decreases, the braking torque may be maintained at a high value. At a low value of speed, the braking torque becomes small and the final stopping of the motor is due to friction. This type of braking is used extensively in connection with the control of elevators and hoists and in other applications in which motors must be started, stopped and reversed frequently.

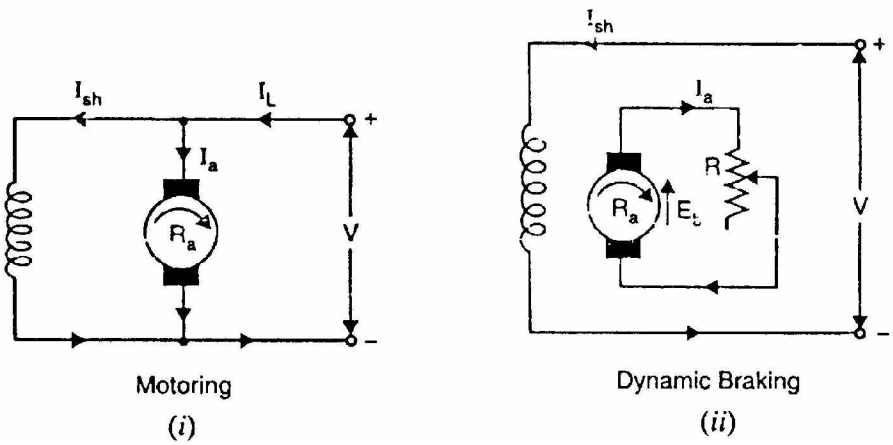

Fig. (5.13)

We now investigate how braking torque depends upon the speed of the motor. Referring to Fig. (5.13) (ii),

$$\text{Armature current, } I_a = \frac{E_b}{R + R_a} = \frac{k_1 N\phi}{R + R_a} \qquad (\because\ E_b \propto \phi N)$$

$$\text{Braking torque, } T_B = k_2 I_a \phi = k_2 \phi \left(\frac{k_1 N\phi}{R + R_a} \right) = k_3 N\phi^2$$

where k_2 and k_3 are constants

For a shunt motor, ϕ is constant.

$\therefore$ Braking torque, $T_B \propto N$

Therefore, braking torque decreases as the motor speed decreases.

(ii) Plugging

In this method, connections to the armature are reversed so that motor tends to rotate in the opposite direction, thus providing the necessary braking effect. When the motor comes to rest, the supply must be cut off otherwise the motor will start rotating in the opposite direction.

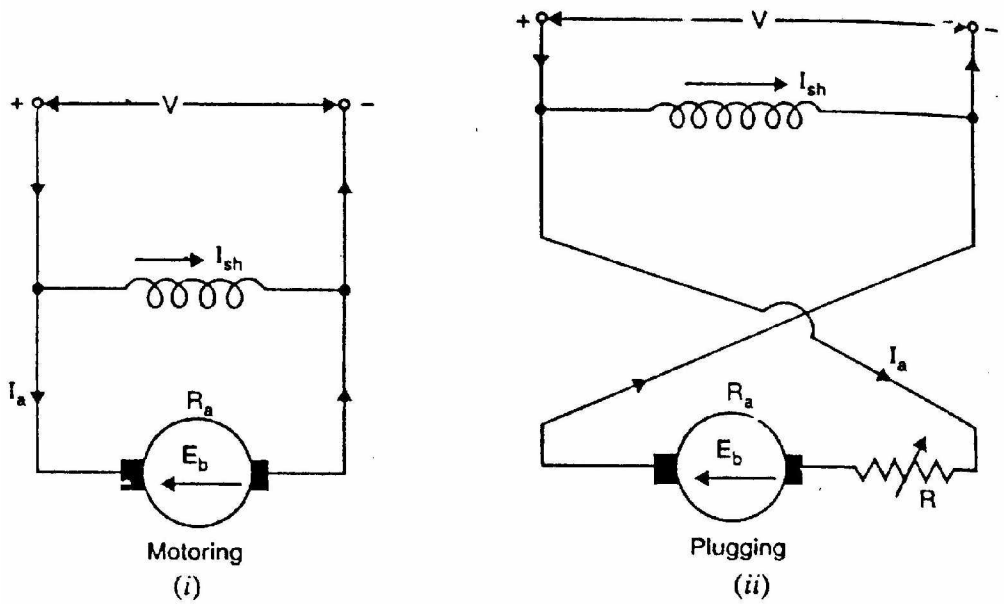

Fig. (5.14)

Fig. (5.14) (ii) shows plugging of a d.c. shunt motor. Note that armature connections are reversed while the connections of the field winding are kept the same. As a result the current in the armature reverses. During the normal running of the motor [See Fig. 5.14 (i)], the back e.m.f. E_b opposes the applied voltage V. However, when armature connections are reversed, back e.m.f. E_b and V act in the same direction around the circuit. Therefore, a voltage equal to

$V + E_b$ is impressed across the armature circuit. Since $E_b \simeq V$, the impressed voltage is approximately 2V. In order 10 limit the current to safe value, a variable resistance R is inserted in the circuit at the time of changing armature connections.

We now investigate how braking torque depends upon the speed of the motor. Referring to Fig. (5.14) (ii),

$$\text{Armature current, } I_a = \frac{V + E_b}{R + R_a} = \frac{V}{R + R_a} + \frac{k_1 N\phi}{R + R_a} \qquad (\text{n } E_b \propto \phi N)$$

$$\text{Braking torque, } T_B = k_2 I_a \phi = k_2 \phi \left(\frac{V}{R + R_a} + \frac{k_1 N\phi}{R + R_a} \right) = k_3 \phi + k_4 N\phi^2$$

For a shunt motor, ϕ is constant.

$$\therefore \quad \text{Braking torque, } T_B = k_5 + k_6 N$$

Thus braking torque decreases as the motor slows down. Note that there is some braking torque ($T_B = k_5$) even when the motor speed is zero.

(iii) Regenerative braking

In the regenerative braking, the motor is run as a generator. As a result, the kinetic energy of the motor is converted into electrical energy and returned to the supply. Fig. (5.15) shows two methods of regenerative braking for a shunt motor.

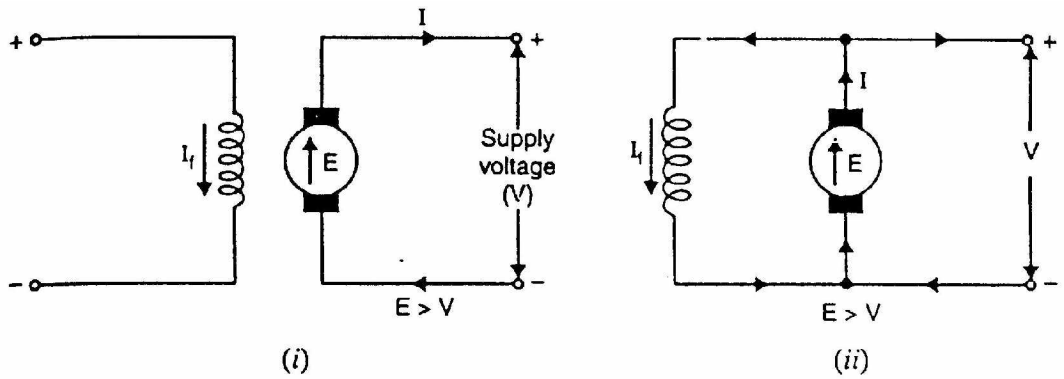

Fig. (5.15)

(a) In one method, field winding is disconnected from the supply and field current is increased by exciting it from another source [See Fig. 5.15 (i)]. As a result, induced e.m.f. E exceeds the supply voltage V and the machine feeds energy into the supply. Thus braking torque is provided upto the speed at which induced e.m.f. and supply voltage are equal. As the machine slows down, it is not possible to maintain induced e.m.f. at a higher value

than the supply voltage. Therefore, this method is possible only for a limited range of speed.

(b) In a second method, the field excitation does not change but the load causes the motor to run above the normal speed (e.g., descending load on a crane). As a result, the induced e.m.f. E becomes greater than the supply voltage V [See Fig. 5.15 (ii)]. The direction of armature current I, therefore, reverses but the direction of shunt field current I_f remains unaltered. Hence the torque is reversed and the speed falls until E becomes less than V.

5.6 Speed Control of Compound Motors

Speed control of compound motors may be obtained by any one of the methods described for shunt motors. Speed control cannot be obtained through adjustment of the series field since such adjustment would radically change the performance characteristics of the motor.

5.7 Necessity of D.C. Motor Starter

At starting, when the motor is stationary, there is no back e.m.f. in the armature. Consequently, if the motor is directly switched on to the mains, the armature will draw a heavy current ($I_a = V/R_a$) because of small armature resistance. As an example, 5 H.P., 220 V shunt motor has a full-load current of 20 A and an armature resistance of about 0.5 Ω. If this motor is directly switched on to supply, it would take an armature current of 220/0.5 = 440 A which is 22 times the full-load current. This high starting current may result in:

(i) burning of armature due to excessive heating effect,
(ii) damaging the commutator and brushes due to heavy sparking,
(iii) excessive voltage drop in the line to which the motor is connected. The result is that the operation of other appliances connected to the line may be impaired and in particular cases, they may refuse to work.

In order to avoid excessive current at starting, a variable resistance (known as starting resistance) is inserted in series with the armature circuit. This resistance is gradually reduced as the motor gains speed (and hence E_b increases) and eventually it is cut out completely when the motor has attained full speed. The value of starting resistance is generally such that starting current is limited to 1.25 to 2 times the full-load current.

5.8 Types of D.C. Motor Starters

The stalling operation of a d.c. motor consists in the insertion of external resistance into the armature circuit to limit the starting current taken by the motor and the removal of this resistance in steps as the motor accelerates. When

the motor attains the normal speed, this resistance is totally cut out of the armature circuit. It is very important and desirable to provide the starter with protective devices to enable the starter arm to return to OFF position

(i) when the supply fails, thus preventing the armature being directly across the mains when this voltage is restored. For this purpose, we use no-volt release coil.

(ii) when the motor becomes overloaded or develops a fault causing the motor to take an excessive current. For this purpose, we use overload release coil.

There are two principal types of d.c. motor starters viz., three-point starter and four-point starter. As we shall see, the two types of starters differ only in the manner in which the no-volt release coil is connected.

5.9 Three-Point Starter

This type of starter is widely used for starting shunt and compound motors.

Schematic diagram

Fig. (5.16) shows the schematic diagram of a three-point starter for a shunt motor with protective devices. It is so called because it has three terminals L, Z and A. The starter consists of starting resistance divided into several sections and connected in series with the armature. The tapping points of the starting resistance are brought out to a number of studs. The three terminals L, Z and A of the starter are connected respectively to the positive line terminal, shunt field terminal and armature terminal. The other terminals of the armature and shunt field windings are connected to the negative terminal of the supply. The no-volt release coil is connected in the shunt field circuit. One end of the handle is connected to the terminal L through the over-load release coil. The other end of the handle moves against a spiral spring and makes contact with each stud during starting operation, cutting out more and more starting resistance as it passes over each stud in clockwise direction.

Operation

(i) To start with, the d.c. supply is switched on with handle in the OFF position.

(ii) The handle is now moved clockwise to the first stud. As soon as it comes in contact with the first stud, the shunt field winding is directly connected across the supply, while the whole starting resistance is inserted in series with the armature circuit.

(iii) As the handle is gradually moved over to the final stud, the starting resistance is cut out of the armature circuit in steps. The handle is now held

magnetically by the no-volt release coil which is energized by shunt field current.

(iv) If the supply voltage is suddenly interrupted or if the field excitation is accidentally cut, the no-volt release coil is demagnetized and the handle goes back to the OFF position under the pull of the spring. If no-volt release coil were not used, then in case of failure of supply, the handle would remain on the final stud. If then supply is restored, the motor will be directly connected across the supply, resulting in an excessive armature current.

(v) If the motor is over-loaded (or a fault occurs), it will draw excessive current from the supply. This current will increase the ampere-turns of the over-load release coil and pull the armature C, thus short-circuiting the no-volt release coil. The no-volt coil is demagnetized and the handle is pulled to the OFF position by the spring. Thus, the motor is automatically disconnected from the supply.

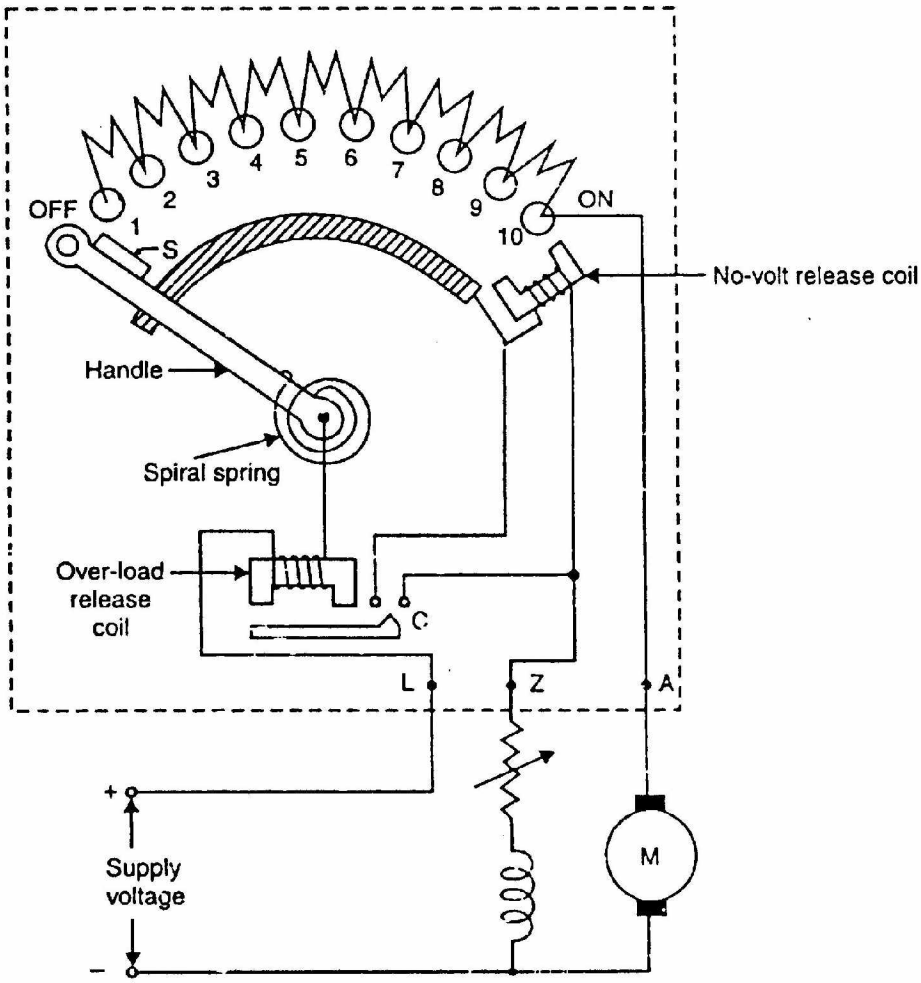

Fig. (5.16)

Drawback

In a three-point starter, the no-volt release coil is connected in series with the shunt field circuit so that it carries the shunt field current. While exercising speed control through field regulator, the field current may be weakened to such an extent that the no-volt release coil may not be able to keep the starter arm in the ON position. This may disconnect the motor from the supply when it is not desired. This drawback is overcome in the four point starter.

5.10 Four-Point Starter

In a four-point starter, the no-volt release coil is connected directly across the supply line through a protective resistance R. Fig. (5.17) shows the schematic diagram of a 4-point starter for a shunt motor (over-load release coil omitted for clarity of the figure). Now the no-volt release coil circuit is independent of the shunt field circuit. Therefore, proper speed control can be exercised without affecting the operation of no-volt release coil.

Note that the only difference between a three-point starter and a four-point starter is the manner in which no-volt release coil is connected. However, the working of the two starters is the same. It may be noted that the three-point starter also provides protection against an open-field circuit. This protection is not provided by the four-point starter.

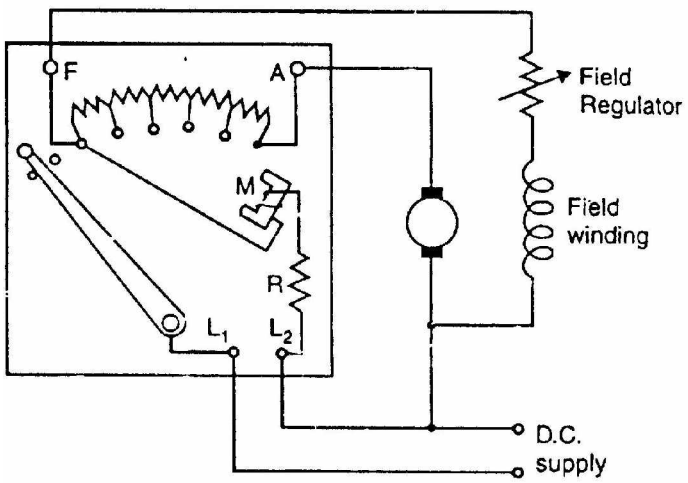

Fig. (5.17)

5.11 Grading of Starting Resistance—Shunt Motors

For starting the motor satisfactorily, the starting resistance is divided into a number of sections in such a way that current fluctuates between maximum (I_m) and minimum (I) values. The upper limit is that value established as the maximum permissible for the motor; it is generally 1.5 times the full-load current of the motor. The lower limit is the value set as a minimum for starting operation; it may be equal to full-load current of the motor or some predetermined value. Fig. (5.18) shows shunt-wound motor with starting resistance divided into three sections between four studs. The resistances of

these sections should be so selected that current during starting remains between I_m and I as shown in Fig. (5.19).

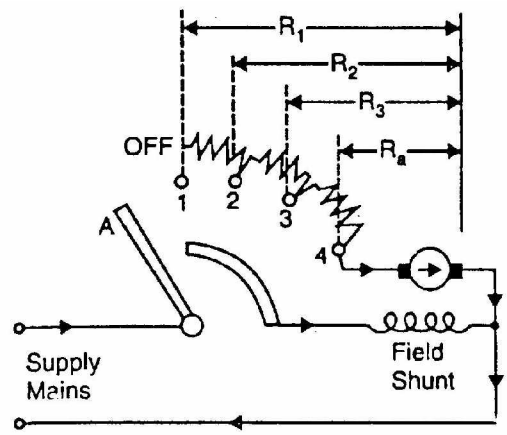

Fig. (5.18)

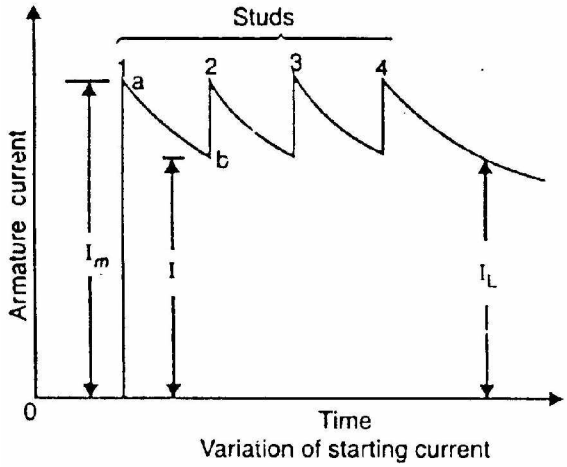

Fig. (5.19)

(i) When arm A is moved from OFF position to stud 1, field and armature circuits are energized and whole of the starting resistance is in series with the armature. The armature current jumps to maximum value given by;

$$I_m = \frac{V}{R_1}$$

where R_1 = Resistance of starter and armature

(ii) As the armature accelerates, the generated e.m.f. increases and the armature current decreases as indicated by curve ab. When the current has fallen to I, arm A is moved over to stud 2, cutting out sufficient resistance to allow the current to rise to I_m again. This operation is repeated until the arm A is on stud 4 and the whole of the starting resistance is cut out of the armature circuit.

(iii) Now the motor continues to accelerate and the current decreases until it settles down at some value I_L such that torque due to this current is just sufficient to meet the load requirement.

5.12 Starter Step Calculations for D.C. Shunt Motor

Fig. (5.20) shows a d.c. shunt motor starter with n resistance sections and (n + 1) studs.

Let R_1 = Total resistance in the armature circuit when the starter arm is on stud no. 1 (See Fig. 5.20)

R_2 = Total resistance in the armature circuit when the starter arm is on stud no. 2 and so on

I_m = Upper current limit
I = Lower current limit
n = Number of sections in the starter resistance
V = Applied voltage
R_a = Armature resistance

On stud 1. When the starter arm-moves to stud 1, the total resistance in the armature circuit is R_1 and the circuit current jumps to maximum values I_m given by;

$$I_m = \frac{V}{R_1} \qquad \text{(i)}$$

Since torque $\propto \phi I_a$, it follows that the maximum torque acts on the armature to accelerate it. As the armature accelerates, the induced e.m.f. (back e.m.f.) increases and the armature current decreases When the current has fallen to the predetermined value I, the starter arm is moved over to stud 2. Let the value of back e.m.f. be E_{b1} at the instant the starter arm leaves the stud 1. Then I is given by;

$$I = \frac{V - E_{b1}}{R_1} \qquad \text{(ii)}$$

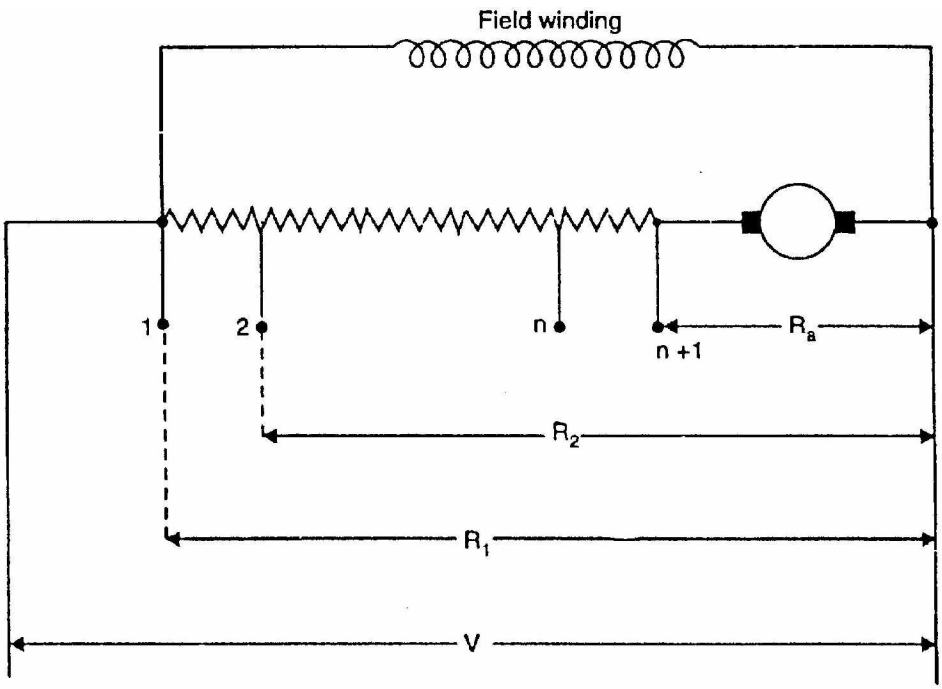

Fig. (5.20)

On stud 2. As the starter arm moves over to stud 2, sufficient resistance is cut out (now total circuit resistance is R_2) and current rises to maximum value I_m once again given by;

$$I_m = \frac{V - E_{b1}}{R_2} \qquad \text{(iii)}$$

The acceleration continues and the back e.m.f. increases and the armature current decreases. When the current has fallen to the predetermined value I, the starter arm is moved over to stud 3. Let E_{b2} be the value of back e.m.f. at the instant the starter arm leaves the stud 2. Then,

$$I = \frac{V - E_{b2}}{R_2} \qquad \text{(iv)}$$

On stud 3.

As the starter arm moves to stud 3, $I_m = \dfrac{V - E_{b2}}{R_3}$ (v)

As the starter arm leaves stud 3, $I = \dfrac{V - E_{b3}}{R_3}$ (vi)

On n<u>th</u> stud.

As the starter arm leaves n<u>th</u> stud, $I = \dfrac{V - E_{bn}}{R_n}$

On (n + 1)<u>th</u> stud. When the starter arm moves over to (n + 1)<u>th</u> stud, all the external starting resistance is cut out, leaving only the armature resistance R_a.

$$\therefore \quad I_m = \frac{V - E_{bn}}{R_a} \quad \text{and} \quad I = \frac{V - E_b}{R_a}$$

Dividing Eq.(ii) by Eq.(iii), we get,

$$\frac{I}{I_m} = \frac{R_2}{R_1}$$

Dividing Eq.(iv) by Eq. (v), we get,

$$\frac{I}{I_m} = \frac{R_3}{R_2}$$

Continuing these divisions, we Lave finally,

$$\frac{I}{I_m} = \frac{R_a}{R_n}$$

Let $\dfrac{I}{I_m} = k.$ Then $\dfrac{R_2}{R_1} = \dfrac{R_3}{R_2} = \ldots = \dfrac{R_a}{R_n} = k$

If we multiply these n equal ratios together, then,

$$\frac{R_2}{R_1} \times \frac{R_3}{R_2} \times \frac{R_4}{R_3} \times \ldots \times \frac{R_a}{R_n} = k^n$$

$$\therefore \quad \frac{R_a}{R_1} = k^n$$

Thus we can calculate the values of R_2, R_3, R_4 etc. if the values of R_1, R_a and n are known.

Chapter (6)

Testing of D.C. Machines

Introduction

There are several tests that are conducted upon a d.c. machine (generator or motor) to judge its performance. One important test is performed to measure the efficiency of a d.c. machine. The efficiency of a d.c. machine depends upon its losses. The smaller the losses, the greater is the efficiency of the machine and vice-versa. The consideration of losses in a d.c. machine is important for two principal reasons. First, losses determine the efficiency of the machine and appreciably influence its operating cost. Secondly, losses determine the heating of the machine and hence the power output that may be obtained without undue deterioration of the insulation. In this chapter, we shall focus our attention on the various methods for the determination of the efficiency of a d.c. machine.

6.1 Efficiency of a D.C. Machine

The power that a d.c. machine receives is called the input and the power it gives out is called the output. Therefore, the efficiency of a d.c. machine, like that of any energy-transferring device, is given by;

$$\text{Efficiency} = \frac{\text{Output}}{\text{Input}} \qquad \text{(i)}$$

Output = Input – Losses and Input = Output + Losses

Therefore, the efficiency of a d.c. machine can also be expressed in the following forms:

$$\text{Efficiency} = \frac{\text{Input} - \text{Losses}}{\text{Input}} \qquad \text{(ii)}$$

$$\text{Efficiency} = \frac{\text{Output}}{\text{Output} + \text{Losses}} \qquad \text{(iii)}$$

The most obvious method of determining the efficiency of a d.c. machine is to directly load it and measure the input power and output power. Then we can use Eq.(i) to determine the efficiency of the machine. This method suffers from three main drawbacks. First, this method requires the application of load on the machine. Secondly, for machines of large rating, the loads of the required sizes

may not be available. Thirdly, even 'fit is possible to provide such loads, large power will be dissipated, making it an expensive method.

The most common method of measuring the efficiency of a d.c. machine is to determine its losses (instead of measuring the input and output on load). We can then use Eq.(ii) or Eq.(iii) to determine the efficiency of the machine. This method has the obvious advantage of convenience and economy.

6.2 Efficiency By Direct Loading

In this method, the d.c. machine is loaded and output and input are measured to find the efficiency. For this purpose, two simple methods can be used.

(i) Brake test

In this method, a brake is applied to a water-cooled pulley mounted on the motor shaft as shown in Fig. (6.1). One end of the rope is fixed to the floor via a spring balance S and a known mass is suspended at the other end. If the spring balance reading is S kg-Wt and the suspended mass has a weight of W kg-Wt, then,

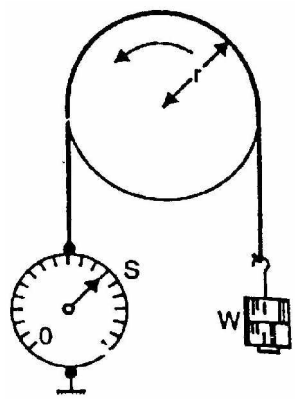

Fig. (6.1)

Net pull on the rope = (W – S) kg-Wt = (W – S) × 9.81 newtons

If r is the radius of the pulley in metres, then the shaft torque T_{sh} developed by the motor is

$$T_{sh} = (W - S) \times 9.81 \times r \quad \text{N - m}$$

If the speed of the pulley is N r.p.m., then,

$$\text{Output power} = \frac{2\pi\ N\ T_{sh}}{60} = \frac{2\pi\ N \times (W - S) \times 9.81 \times r}{60} \quad \text{watts}$$

Let V = Supply voltage in volts
I = Current taken by the motor in amperes

$\therefore$ Input to motor = V I watts

$$\therefore \quad \text{Efficiency} = \frac{2\pi\ N(W - S) \times r \times 9.81}{60 \times VI}$$

(ii) In another method, the motor drives a calibrated generator i.e. one whose efficiency is known at all loads. The output of the generator is measured with the help of an ammeter and voltmeter.

$$\therefore \quad \text{Output of motor} = \frac{\text{Generator output}}{\text{Generator efficiency}}$$

Let V = Supply voltage is volts
I = Current taken by the motor is amperes

Input to motor = VI

Thus efficiency of the motor can be determined.

Because of several disadvantages (See Sec. 6.1), direct loading method is used only for determining the efficiency of small machines.

6.3 Swinburne's Method for Determining Efficiency

In this method, the d.c. machine (generator or motor) is run as a motor at no-load and losses of the machine are determined. Once the losses of the machine are known, its efficiency at any desired load can be determined in advance. It may be noted that this method is applicable to those machines in which flux is practically constant at all loads e.g., shunt and compound machines. Let us see how the efficiency of a d.c. shunt machine (generator or motor) is determined by this method. The test insists of two steps:

(i) Determination of hot resistances of windings

The armature resistance and shunt field resistance are measured using a battery, voltmeter and ammeter. Since these resistances are measured when the machine is cold, they must be converted to values corresponding to the temperature at which the machine would work on full-load. Generally, these values are measured for a temperature rise of 40°C above the room temperature. Let the hot resistances of armature and shunt field be R_a and R_{sh} respectively.

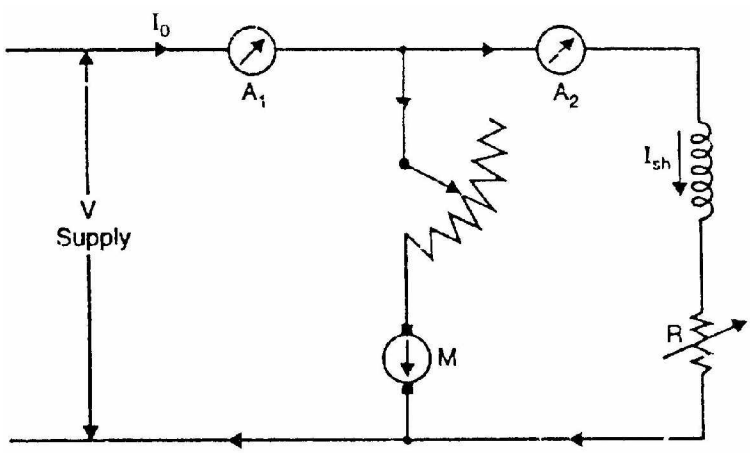

Fig. (6.2)

(ii) Determination of constant losses

The machine is run as a motor on no-load with supply voltage adjusted to the rated voltage i.e. voltage stamped on the nameplate. The speed of the motor is adjusted to the rated speed with the help of field regulator R as shown is Fig. (6.2).

Let V = Supply voltage

I_0 = No-load current read by ammeter A_1

I_{sh} = Shunt-field current read by ammeter A_2

$\therefore$ No-load armature current, $I_{a0} = I_0 - I_{sh}$

No-load input power to motor = $V\ I_0$

No-load power input to armature = $V\ I_{a0} = V(I_0 - I_{sh})$

Since the output of the motor is zero, the no-load input power to the armature supplies (a) iron losses in the core (b) friction loss (c) windage loss (d) armature Cu loss $\left[I_{a0}^2 R_a \text{ or } (I_0 - I_{sh})^2 R_a\right]$.

Constant losses, W_C = Input to motor – Armature Cu loss

or $$W_C = V\ I_0 - (I_0 - I_{sh})^2 R_a$$

Since constant losses are known, the efficiency of the machine at any other load can be determined. Suppose it is desired to determine the efficiency of the machine at load current I. Then,

Armature current, $I_a = I - I_{sh}$ ... if the machine is motoring

$= I + I_{sh}$ ... if the machine is generating

Efficiency when running as a motor

Input power to motor = VI

Armature Cu loss = $I_a^2 R_a = (I - I_{sh})^2 R_a$

Constant losses = W_C found above

Total losses = $(I - I_{sh})^2 R_a + W_C$

$$\therefore \quad \text{Motor efficiency, } \eta_m = \frac{\text{Input} - \text{Losses}}{\text{Input}} = \frac{VI - (I - I_{sh})^2 R_a - W_C}{VI}$$

Efficiency when running as a generator

Output of generator = VI

Armature Cu loss = $(I + I_{sh})^2 R_a$

Constant losses = W_C found above

$$\text{Total losses} = (I + I_{sh})^2 R_a + W_C$$

$$\therefore \quad \text{Generator efficiency, } \eta_g = \frac{\text{Output}}{\text{Output} + \text{Losses}} = \frac{VI}{VI + (I + I_{sh})^2 R_a + W_C}$$

Advantages of Swinburne's test

(i) The power required to carry out the test is small because it is a no-load test. Therefore, this method is quite economical.
(ii) The efficiency can be determined at any load because constant losses are known.
(iii) This test is very convenient.

Disadvantages of Swinburne's test

(i) It does not take into account the stray load losses that occur when the machine is loaded.
(ii) This test does not enable us to check the performance of the machine on full-load. For example, it does not indicate whether commutation on full-load is satisfactory and whether the temperature rise is within the specified limits.
(iii) This test does not give quite accurate efficiency of the machine. It is because iron losses under actual load are greater than those measured. This is mainly due to armature reaction distorting the field.

6.4 Regenerative or Hopkinson's-Test

This method of determining the efficiency cf a d.c. machine saves power and gives more accurate results. In order to carry out this test, we require two identical d.c. machines and a source of electrical power.

Principle

Two identical d.c. shunt machines are mechanically coupled and connected in parallel across the d.c. supply. By adjusting the field excitations of the machines, one is run as a motor and the other as a generator. The electric power from the generator and electrical power from the d.c. supply are fed to the motor. The electric power given to the motor is mostly converted into mechanical power, the rest going to the various motor losses. This mechanical power is given to the generator. The electrical power of the generator is given to the motor except that which is wasted as generator losses. Thus the electrical power taken from the d.c. supply is the sum of motor and generator losses and this can be measured directly by a voltmeter and an ammeter. Since the power input from the d.c. supply is equal to the power required to supply the losses of the two machines, this test can be carried out with a small amount of power. By adjusting the field

strengths of the machines, any load can be put on the machines. Therefore, we can measure the total loss of the machines at any load. Since the machines can be tested under full-load conditions (of course at the expense of power equal to the losses in the two machines), the temperatures rise and commutation qualities of the machines can be observed.

Circuit

Fig. (6.3) shows the essential connections for Hopkinson's test. Two identical d.c. shunt machines are mechanically coupled and are connected in parallel across the d.c. supply. By adjusting the field strengths of the two machines, the machine M is made to run as a motor and machine G as a generator. The motor M draws current I_1 from the generator G and current I_2 from the d.c. supply so that input current to motor M is $(I_1 + I_2)$. Power taken from the d.c. supply is VI_2 and is equal to the total motor and generator losses. The field current of motor M is I_4 and that of generator G is I_3.

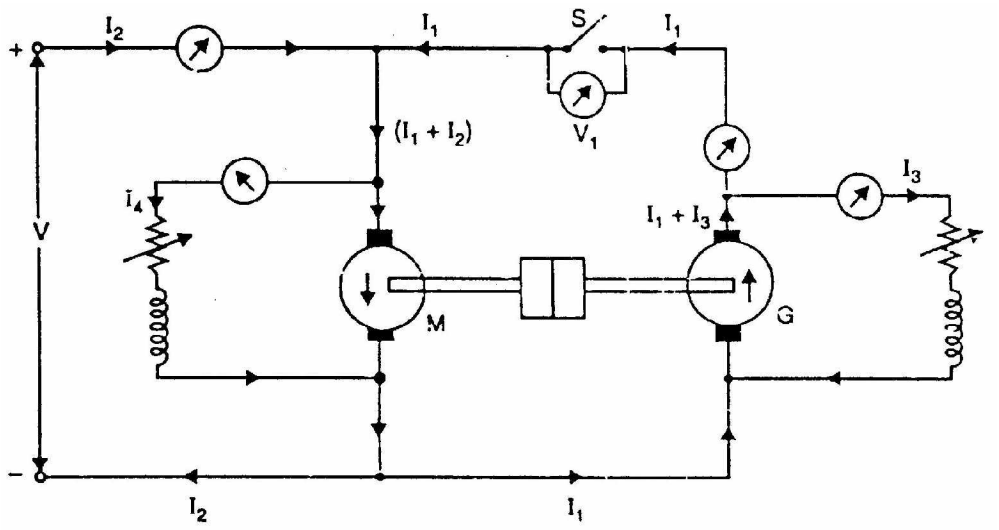

Fig. (6.3)

Calculations

If V be the supply voltage, then,

Motor input = $V(I_1 + I_2)$

Generator output = VI_1

We shall find the efficiencies of the machines considering two cases viz. (i) assuming that both machines have the same efficiency η (ii) assuming iron, friction and windage losses are the same in both machines.

(i) Assuming that both machines have the same efficiency η

Motor output = $\eta \times$ motor input = $\eta\ V(I_1 + I_2)$ = Generator input

Generator output = $\eta \times$ generator input = $\eta \times \eta\ V(I_1 + I_2) = \eta^2\ V(I_1 + I_2)$

But generator output is VI_1

$$\therefore \quad \eta^2 V(I_1 + I_2) = VI_1$$

or $$\eta = \sqrt{\frac{I_1}{I_1 + I_2}}$$

This expression gives the value of efficiency sufficiently accurate for a rough test. However, if accuracy is required, the efficiencies of the two machines should be calculated separately as below.

(ii) Assuming that iron, friction and windage losses are same in both machines.

It is not to assume that the two machines have the same efficiency. It is because armature and field in the two machines are not the same. However, iron, friction and windage losses in the two machines will be the same because the machines are identical. On this assumption, we can find the of each machine as under:

Let R_a = armature resistance of each machine
I_3 = field current of generator G
I_4 = field current of motor M

Armature Cu loss in generator = $(I_1 + I_3)^2 R_a$

Armature Cu loss in motor = $(I_1 + I_2 - I_4)^2 R_a$

Shunt Cu loss in generator = $V\ I_3$

Shunt Cu loss in motor = $V\ I_4$

Power drawn from the d.c. supply is VI_2 and is equal to the total losses of the motor and generator

VI_2 = Total losses of motor and generator

If we subtract armature and shunt Cu losses of the two machines from VI_2, we get iron, friction windage losses of the two machines.

Iron, friction and windage losses of two machines (M and G)

$$= VI_2 - \left[(I_1 + I_3)^2 R_a + (I_1 + I_2 - I_4)^2 R_a + VI_3 + VI_4\right] = W \quad \text{(say)}$$

$\therefore$ Iron, friction and windage losses of each machine = W/2

For generator

Output of generator = VI_1

Total losses = $\frac{W}{2} + (I_1 + I_3)^2 R_a + VI_3 = W_g$ (say)

$\therefore$ Generator efficiency, $\eta_g = \frac{VI_1}{VI_1 + W_g}$

For motor

Input to motor = $V(I_1 + I_2)$

Total losses = $(I_1 + I_2 - I_4)^2 R_a + VI_4 + \frac{W}{2} = W_m$ (say)

$\therefore$ Motor efficiency, $\eta_m = \frac{\text{Input} - \text{Losses}}{\text{Input}} = \frac{V(I_1 + I_2) - W_m}{V(I_1 + I_2)}$

6.5 Alternate Connections for Hopkinson's Test

Fig. (6.4) shows the alternative connections for Hopkinson's test. The main difference is that now the shunt field windings are directly connected across the lines. Therefore, the input line current is I_1, excluding the field currents. The power VI_1 drawn from the d.c. supply is equal to the total losses of the two machines except the shunt field losses of the two machines i.e.,

VI_1 = Total losses o

f

t
h
e

t
w
o

m
a
c
h
i
n
e
s

e
x
c
e
p
t

s
h
u
n
t

f
i
e
l
d

l
o
s
s
e

s

o

f

t

h

e

t

w

o

m

a

c

h

i

n

e

s

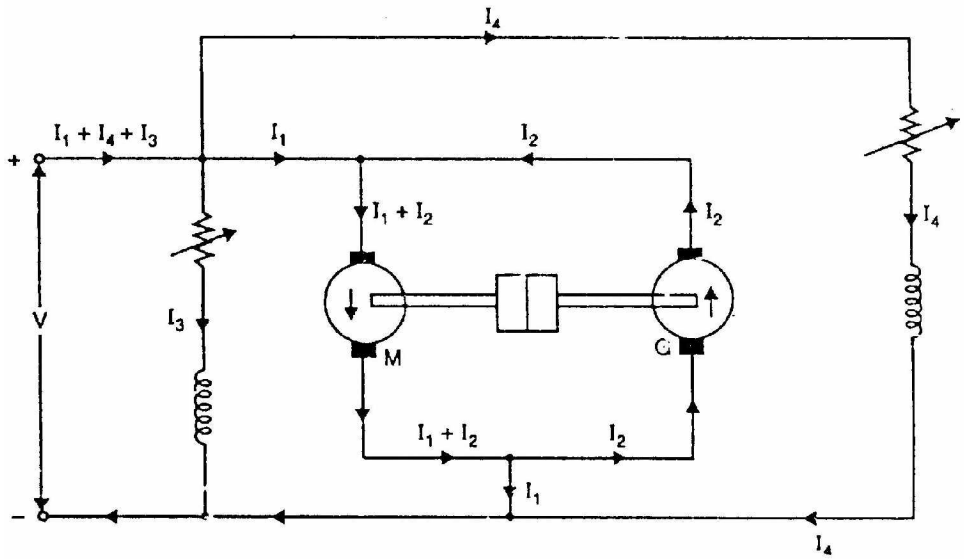

Fig. (6.4)

Motor armature Cu loss = $(I_1 + I_2)^2 R_a$

Generator armature Cu loss = $I_2^2 R_a$

Iron, friction and windage losses of the two machines are VI_1 minus armature Cu losses of the two machines i.e..

Iron, friction and windage losses of the two machines

$$= VI_1 - \left[(I_1 + I_2)^2 R_a + I_2^2 R_a\right] = W \quad \text{(say)}$$

Iron, friction and windage losses of each machine = W/2

Motor efficiency

$$\text{Motor input, } P_i = V(I_1 + I_2 + I_3)$$

$$\text{Motor losses} = (I_1 + I_2)^2 R_a + VI_3 + \frac{W}{2} = W_m \quad \text{(say)}$$

$$\therefore \quad \text{Motor efficiency, } \eta_m = \frac{\text{Motor input} - \text{Losses}}{\text{Motor input}} = \frac{P_i - W_m}{P_i}$$

Generator efficiency

$$\text{Generator output} = VI_2$$

$$\text{Generator losses} = I_2^2 R_a + VI_4 + \frac{W}{2} = W_g \quad \text{(say)}$$

$$\therefore \quad \text{Generator efficiency, } \eta_g = \frac{VI_2}{VI_2 + W_g}$$

6.6 Advantages of Hopkinson's Test

The advantages of Hopkinson's test are :

(i) The total power required to test the two machines is small compared with the full-load power of each machine.

(ii) The machines can be tested under full-load conditions so that commutation qualities and temperature rise can be checked.

(iii) It is more accurate to measure the loss directly than to measure it as the difference of the measured input and output.

(iv) All the measurements are electrical which are simpler and more accurate than mechanical measurements.

The main disadvantage is that two similar d.c. machines are required.

6.7 Retardation or Running down Test

This is the best and simplest method to find the efficiency of a constant-speed d.c. machine (e.g., shunt generator and motor). In this method, we find the mechanical (friction and windage) and iron losses of the machine. Then knowing the armature and shunt Cu losses at any load, the efficiency of the machine can be calculated at that load.

Principle

Consider a d.c. shunt motor running at no-load.

(i) If the supply to the armature is cut off but field remains normally excited, the motor slows down gradually and finally stops. The kinetic energy of the armature is used up to overcome friction, windage and iron losses.

(ii) If the supply to the armature as well as field excitation is cut off, the motor again slows down and finally stops. Now the kinetic energy of the armature is used up to overcome only the friction and windage losses. This is expected because in the absence of flux, there will be no iron losses.

By carrying out the first test, we can find out the friction, windage and iron losses and hence the efficiency of the machine. However, if we perform the second test also, we can separate friction and windage losses from the iron losses.

Theory of retardation test

In the retardation test, the d.c. machine is run as a motor at a speed just above the normal. Then the supply to the armature is cut off while the field is normally excited. The speed is allowed to fall to some value just below normal. The time taken for this fall of speed is noted. From these observations, the rotational losses (i.e., friction, windage and iron losses) and hence the efficiency of the machine can be determined.

Let N = normal speed in r.p.m.

ω = normal angular velocity in rad/s = 2π N/60

$\therefore$ Rotational losses, W = Rate of loss of K.E. of armature

or $$W = \frac{d}{dt}\left(\frac{1}{2}I\omega^2\right) = I\omega\frac{d\omega}{dt}$$

Here I is the moment of inertia of the armature. As $\omega = 2\pi$ N/60,

$$\therefore \quad W = I \times \frac{2\pi N}{60} \times \frac{d}{dt}\left(\frac{2\pi N}{60}\right) = \left(\frac{2\pi}{60}\right)^2 IN\frac{dN}{dt}$$

or $$W = 0.011\, IN\frac{dN}{dt}$$

Let us illustrate the application of retardation test with a numerical example. Suppose the normal speed of a d.c. machine is 1000 r.p.m. When retardation test is performed, the time taken for the speed to fall from 1030 r.p.m. to 970 r.p.m.

is 15 seconds with field normally excited. If the moment of inertia of the armature is 75 kg m , then,

$$\text{Rotational losses, } W = 0.011\, IN\frac{dN}{dt}$$

Here $\quad I = 75\ \text{kg}\,\text{m}^2; \qquad N = 1000\ \text{r.p.m}$

$$dN = 1030 - 970 = 60\ \text{r.pm.}; \qquad dt = 15\ \text{sec}$$

$$\therefore \quad W = 0.011 \times 75 \times 1000 \times \frac{60}{15} = 3300 \ \text{watts}$$

The main difficulty with this method is the accurate determination of the speed which is continuously changing.

6.8 Moment of Inertia (I) of the Armature

In retardation test, the rotational losses are given by;

$$W = 0.011\, IN\frac{dN}{dt}$$

In order to find W, the value of I must be known. It is difficult to determine I directly or by calculation. Therefore, we perform another experiment by which either I is calculated or it is eliminated from the above expression.

(i) First method

It is a fly-wheel method in which the value of I is calculated. First, retardation test is performed with armature alone and dN/dt_1 is determined. Next, a fly-wheel of known moment of inertia I_1 is keyed on to the shaft of the machine. For the same change in speed, dN/dt_2 is noted. Since the addition of fly-wheel will not materially affect the rotational losses in the two cases,

$$\therefore \quad \text{For the first case, } W = 0.011\, IN\frac{dN}{dt_1}$$

$$\text{For the second case, } W = 0.011\,(I + I_1)N\frac{dN}{dt_2}$$

$$\therefore \quad 0.011\, IN\frac{dN}{dt_1} = 0.011\,(I + I_1)N\frac{dN}{dt_2}$$

or $$I\frac{dN}{dt_1} = (I + I_1)\frac{dN}{dt_2}$$

or $$\frac{I + I_1}{I} = \frac{dN/dt_1}{dN/dt_2} = \frac{dt_2}{dt_1}$$

or $$\frac{I_1}{I} = \frac{dt_2 - dt_1}{dt_1} = \frac{t_2 - t_1}{t_1}$$

or $$I = I_1 \times \frac{t_2 - t_1}{t_1}$$

Since the values of I_1, t_1 and t_2 are known, the moment of inertia I of the armature can be determined.

(ii) Second method

In this method, I is eliminated from the expression by an experiment. First, retardation test is performed with armature alone. The rotational losses are given by;

$$W = 0.011\, IN \frac{dN}{dt_1}$$

Next the motor is loaded with a known amount of power W' with a brake. For the same change in speed, dN/dt_2 is noted. Then,

$$W + W' = 0.011\, IN \frac{dN}{dt_2}$$

$$\therefore \quad \frac{W + W'}{W} = \frac{dt}{dt_2} = \frac{t_1}{t_2}$$

or $$\frac{W'}{W} = \frac{t_1 - t_2}{t_2}$$

$$\therefore \quad W = W' \times \frac{t_1 - t_2}{t_2}$$

Since the values of W', t_1 and t_2 are known, the value of W can be determined.

6.9 Electric Loading in Retardation Test

In a retardation test, the rotational losses W are given by;

$$W = 0.011\, IN \frac{dN}{dt}$$

As discussed in Sec. (6.8), we can eliminate I (moment of inertia of armature) from the above expression by applying either mechanical or electric loading to the armature. The electric leading is preferred because of convenience and reliability. Fig. (6.5) illustrates how electric loading is applied to slow down the armature. The double throw switch S is thrown to the supply and the machine is brought to full-load speed. Then the switch S is thrown to the other side connecting a non-inductive resistance R across the armature. The supply now is

cut off and the power dissipated in R acts as a retarding torque to slow down the armature.

Let V' = average voltage across R

I'_a = average current through R

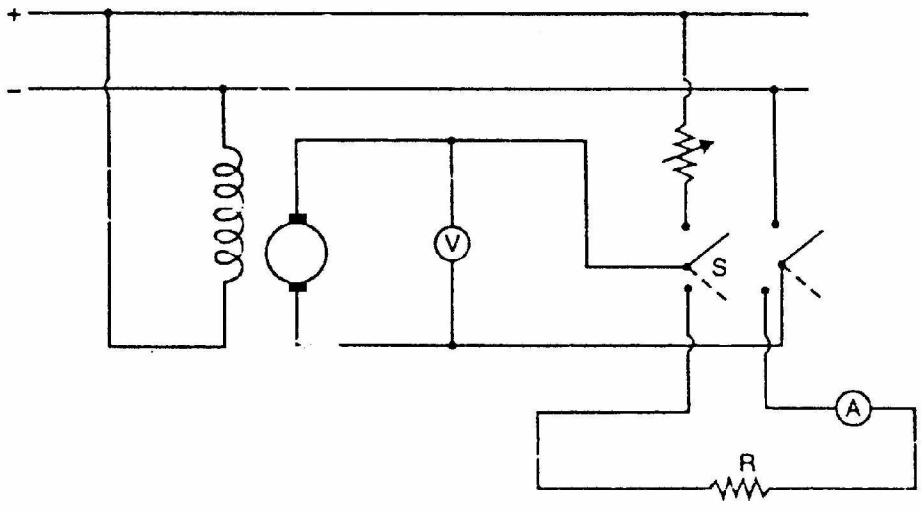

Fig. (6.5)

The electric loading W' (or extra power loss) is given by;

$$W' = \text{average voltage x average current} = V' I'_a$$

Chapter (7)

Transformer

Introduction

The transformer is probably one of the most useful electrical devices ever invented. It can change the magnitude of alternating voltage or current from one value to another. This useful property of transformer is mainly responsible for the widespread use of alternating currents rather than direct currents i.e., electric power is generated, transmitted and distributed in the form of alternating current. Transformers have no moving parts, rugged and durable in construction, thus requiring very little attention. They also have a very high efficiency—as high as 99%. In this chapter, we shall study some of the basic properties of transformers.

7.1 Transformer

A transformer is a static piece of equipment used either for raising or lowering the voltage of an a.c. supply with a corresponding decrease or increase in current. It essentially consists of two windings, the primary and secondary, wound on a common laminated magnetic core as shown in Fig. (7.1). The winding connected to the a.c. source is called primary winding (or primary) and the one connected to load is called secondary winding (or secondary). The alternating voltage V_1 whose magnitude is to be changed is applied to the primary. Depending upon the number of turns of the primary (N_1) and secondary (N_2), an alternating e.m.f. E_2 is induced in the secondary. This induced e.m.f. E_2 in the secondary causes a secondary current I_2. Consequently, terminal voltage V_2 will appear across the load. If $V_2 > V_1$, it is called a step up-transformer. On the other hand, if $V_2 < V_1$, it is called a step-down transformer.

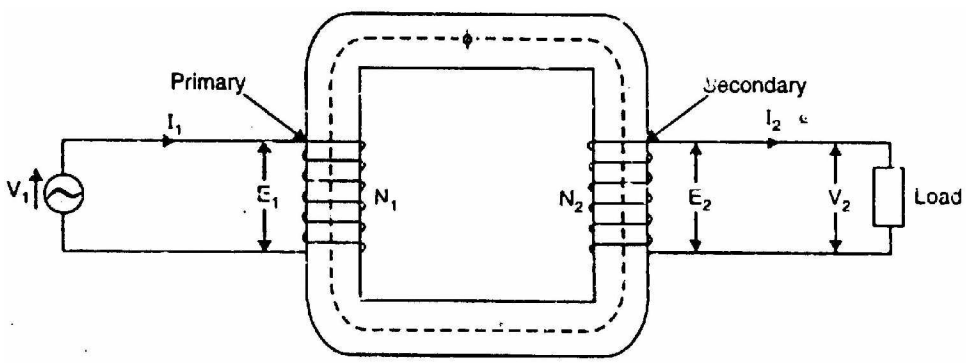

Fig.(7.1)

Working

When an alternating voltage V_1 is applied to the primary, an alternating flux ϕ is set up in the core. This alternating flux links both the windings and induces e.m.f.s E_1 and E_2 in them according to Faraday's laws of electromagnetic induction. The e.m.f. E_1 is termed as primary e.m.f. and e.m.f. E_2 is termed as secondary e.m.f.

Clearly, $$E_1 = -N_1 \frac{d\phi}{dt}$$

and $$E_2 = -N_2 \frac{d\phi}{dt}$$

$$\therefore \quad \frac{E_2}{E_1} = \frac{N_2}{N_1}$$

Note that magnitudes of E_2 and E_1 depend upon the number of turns on the secondary and primary respectively. If $N_2 > N_1$, then $E_2 > E_1$ (or $V_2 > V_1$) and we get a step-up transformer. On the other hand, if $N_2 < N_1$, then $E_2 < E_1$ (or $V_2 < V_1$) and we get a step-down transformer. If load is connected across the secondary winding, the secondary e.m.f. E_2 will cause a current I_2 to flow through the load. Thus, a transformer enables us to transfer a.c. power from one circuit to another with a change in voltage level.

The following points may be noted carefully:

(i) The transformer action is based on the laws of electromagnetic induction.

(ii) There is no electrical connection between the primary and secondary. The a.c. power is transferred from primary to secondary through magnetic flux.

(iii) There is no change in frequency i.e., output power has the same frequency as the input power.

(iv) The losses that occur in a transformer are:

  (a) core losses—eddy current and hysteresis losses

  (b) copper losses—in the resistance of the windings

In practice, these losses are very small so that output power is nearly equal to the input primary power. In other words, a transformer has very high efficiency.

7.2 Theory of an Ideal Transformer

An ideal transformer is one that has

(i) no winding resistance

(ii) no leakage flux i.e., the same flux links both the windings

(iii) no iron losses (i.e., eddy current and hysteresis losses) in the core

Although ideal transformer cannot be physically realized, yet its study provides a very powerful tool in the analysis of a practical transformer. In fact, practical transformers have properties that approach very close to an ideal transformer.

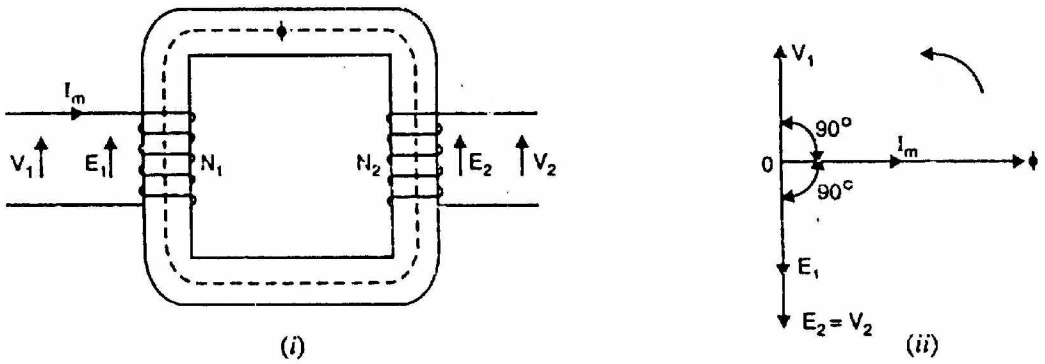

Fig.(7.2)

Consider an ideal transformer on no load i.e., secondary is open-circuited as shown in Fig. (7.2 (i)). Under such conditions, the primary is simply a coil of pure inductance. When an alternating voltage V_1 is applied to the primary, it draws a small magnetizing current I_m which lags behind the applied voltage by 90°. This alternating current I_m produces an alternating flux ϕ which is proportional to and in phase with it. The alternating flux ϕ links both the windings and induces e.m.f. E_1 in the primary and e.m.f. E_2 in the secondary. The primary e.m.f. E_1 is, at every instant, equal to and in opposition to V_1 (Lenz's law). Both e.m.f.s E_1 and E_2 lag behind flux ϕ by 90° (See Sec. 7.3). However, their magnitudes depend upon the number of primary and secondary turns.

Fig. (7.2 (ii)) shows the phasor diagram of an ideal transformer on no load. Since flux ϕ is common to both the windings, it has been taken as the reference phasor. As shown in Sec. 7.3, the primary e.m.f. E_1 and secondary e.m.f. E_2 lag behind the flux ϕ by 90°. Note that E_1 and E_2 are in phase. But E_1 is equal to V_1 and 180° out of phase with it.

7.3 E.M.F. Equation of a Transformer

Consider that an alternating voltage V_1 of frequency f is applied to the primary as shown in Fig. (7.2 (i)). The sinusoidal flux ϕ produced by the primary can be represented as:

$$\phi = \phi_m \sin\omega t$$

The instantaneous e.m.f. e_1 induced in the primary is

$$e_1 = -N_1 \frac{d\phi}{dt} = -N_1 \frac{d}{dt}(\phi_m \sin \omega t)$$

$$= -\omega N_1 \phi_m \cos \omega t = -2\pi f N_1 \phi_m \cos \omega t$$

$$= 2\pi f N_1 \phi_m \sin(\omega t - 90°) \qquad \text{(i)}$$

It is clear from the above equation that maximum value of induced e.m.f. in the primary is

$$E_{m1} = 2\pi f N_1 \phi_m$$

The r.m.s. value E^ of the primary e.m.f. is

$$E_1 = \frac{E_{m1}}{\sqrt{2}} = \frac{2\pi f N_1 \phi_m}{\sqrt{2}}$$

or $\quad E_1 = 4.44 f N_1 \phi_m$

Similarly $\quad E_2 = 4.44 f N_2 \phi_m$

In an ideal transformer, $E_1 = V_1$ and $E_2 = V_2$.

Note. It is clear from exp. (i) above that e.m.f. E_1 induced in the primary lags behind the flux ϕ by 90°. Likewise, e.m.f. E_2 induced in the secondary lags behind flux ϕ by 90°.

7.4 Voltage Transformation Ratio (K)

From the above equations of induced e.m.f., we have (See Fig. 7.3),

$$\frac{E_2}{E_1} = \frac{N_2}{N_1} = K$$

The constant K is called *voltage transformation ratio*. Thus if K = 5 (i.e. $N_2/N_1 = 5$), then $E_2 = 5\ E_1$.

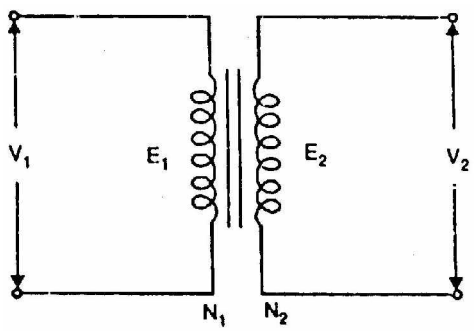

Fig.(7.3)

For an ideal transformer;

(i) $E_1 = V_1$ and $E_2 = V_2$ as there is no voltage drop in the windings.

$$\therefore \quad \frac{E_2}{E_1} = \frac{V_2}{V_1} = \frac{N_2}{N_1} = K$$

(ii) there are no losses. Therefore, volt-amperes input to the primary are equal to the output volt-amperes i.e.

$$V_1 I_1 = V_2 I_2$$

or $$\frac{I_2}{I_1} = \frac{V_1}{V_2} = \frac{1}{K}$$

Hence, currents are in the inverse ratio of voltage transformation ratio. This simply means that if we raise the voltage, there is a corresponding decrease of current.

7.5 Practical Transformer

A practical transformer differs from the ideal transformer in many respects. The practical transformer has (i) iron losses (ii) winding resistances and (iii) magnetic leakage, giving rise to leakage reactances.

(i) **Iron losses**. Since the iron core is subjected to alternating flux, there occurs eddy current and hysteresis loss in it. These two losses together are known as iron losses or core losses. The iron losses depend upon the supply frequency, maximum flux density in the core, volume of the core etc. It may be noted that magnitude of iron losses is quite small in a practical transformer.

(ii) **Winding resistances**. Since the windings consist of copper conductors, it immediately follows that both primary and secondary will have winding resistance. The primary resistance R_1 and secondary resistance R_2 act in series with the respective windings as shown in Fig. (7.4). When current flows through the windings, there will be power loss as well as a loss in voltage due to IR drop. This will affect the power factor and E_1 will be less than V_1 while V_2 will be less than E_2.

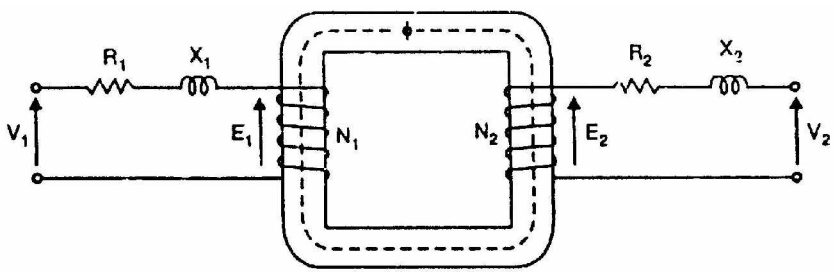

Fig.(7.4)

(iii) **Leakage reactances**. Both primary and secondary currents produce flux. The flux ϕ which links both the windings is the useful flux and is called mutual flux. However, primary current would produce some flux ϕ which would not link the secondary winding (See Fig. 7.5). Similarly, secondary current would produce some flux ϕ that would not link the primary winding. The flux such as ϕ_1 or ϕ_2 which links only one winding is called leakage flux. The leakage flux paths are mainly through the air. The effect

of these leakage fluxes would be the same as though inductive reactance were connected in series with each winding of transformer that had no leakage flux as shown in Fig. (7.4). In other words, the effect of primary leakage flux ϕ_1 is to introduce an inductive reactance X_1 in series with the primary winding as shown in Fig. (7.4). Similarly, the secondary leakage flux ϕ_2 introduces an inductive reactance X_2 in series with the secondary winding. There will be no power loss due to leakage reactance. However, the presence of leakage reactance in the windings changes the power factor as well as there is voltage loss due to IX drop.

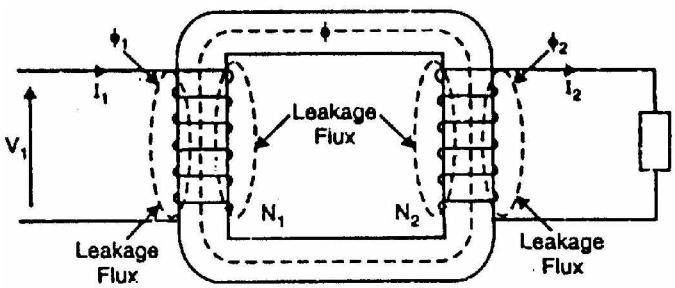

Fig.(7.5)

Note. Although leakage flux in a transformer is quite small (about 5% of ϕ) compared to the mutual flux ϕ, yet it cannot be ignored. It is because leakage flux paths are through air of high reluctance and hence require considerable e.m.f. It may be noted that energy is conveyed from the primary winding to the secondary winding by mutual flux ϕ which links both the windings.

7.6 Practical Transformer on No Load

Consider a practical transformer on no load i.e., secondary on open-circuit as shown in Fig. (7.6 (i)). The primary will draw a small current I_0 to supply (i) the iron losses and (ii) a very small amount of copper loss in the primary. Hence the primary no load current I_0 is not 90° behind the applied voltage V_1 but lags it by an angle $\phi_0 < 90°$ as shown in the phasor diagram in Fig. (7.6 (ii)).

No load input power, $W_0 = V_1 I_0 \cos \phi_0$

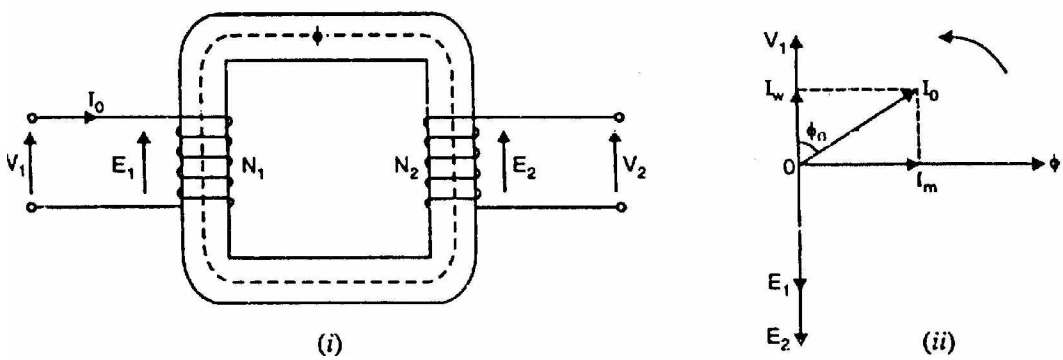

Fig.(7.6)

As seen from the phasor diagram in Fig. (7.6 (ii)), the no-load primary current I_0 can be resolved into two rectangular components viz.

(i) The component I_W in phase with the applied voltage V_1. This is known as active or working or iron loss component and supplies the iron loss and a very small primary copper loss.

$$I_W = I_0 \cos \phi_0$$

(b) The component I_m lagging behind V_1 by 90° and is known as magnetizing component. It is this component which produces the mutual flux ϕ in the core.

$$I_m = I_0 \sin \phi_0$$

Clearly, I_0 is phasor sum of I_m and I_W,

$$\therefore \quad I_0 = \sqrt{I_m^2 + I_W^2}$$

No load p.f., $\cos\phi_0 = \dfrac{I_W}{I_0}$

It is emphasized here that no load primary copper loss (i.e. $I_0^2 R_1$) is very small and may be neglected. Therefore, the no load primary input power is practically equal to the iron loss in the transformer i.e.,

No load input power, W_0 = Iron loss

Note. At no load, there is no current in the secondary so that $V_2 = E_2$. On the primary side, the drops in R_1 and X_1, due to I_0 are also very small because of the smallness of I_0. Hence, we can say that at no load, $V_1 = E_1$.

7.7 Ideal Transformer on Load

Let us connect a load Z_L across the secondary of an ideal transformer as shown in Fig. (7.7 (i)). The secondary e.m.f. E_2 will cause a current I_2 to flow through the load.

$$I_2 = \frac{E_2}{Z_L} = \frac{V_2}{Z_L}$$

The angle at which I_2 leads or lags V_2 (or E_2) depends upon the resistance and reactance of the load. In the present case, we have considered inductive load so that current I_2 lags behind V_2 (or E_2) by ϕ_2.

The secondary current I_2 sets up an m.m.f. N_2I_2 which produces a flux in the opposite direction to the flux ϕ originally set up in the primary by the magnetizing current. This will change the flux in the core from the original value. However, the flux in the core should not change from the original value.

In order to fulfill this condition, the primary must develop an m.m.f. which exactly counterbalances the secondary m.m.f. N_2I_2. Hence a primary current I_1 must flow such that:

$$N_1I_1 = N_2I_2$$

or $$I_1 = \frac{N_2}{N_1} I_2 = KI_2$$

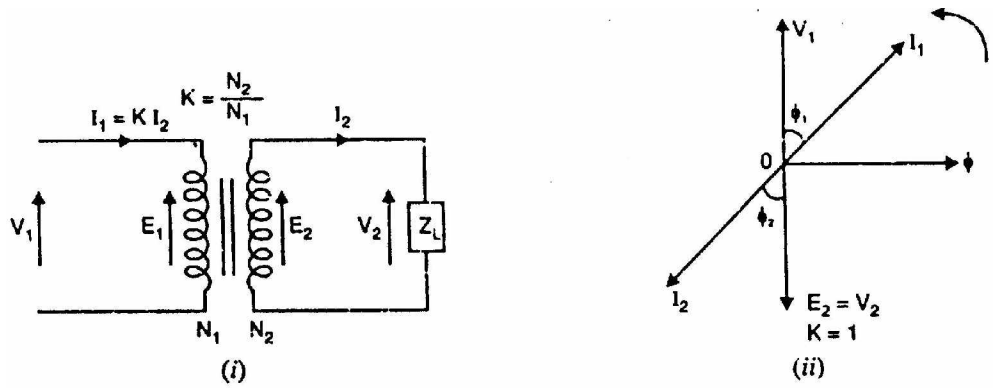

Fig.(7.7)

Thus when a transformer is loaded and carries a secondary current I_2, then a current I_1, (= K I_2) must flow in the primary to maintain the m.m.f. balance. In other words, the primary must draw enough current to neutralize the demagnetizing effect of secondary current so that mutual flux ϕ remains constant. Thus as the secondary current increases, the primary current I_1 (= KI_2) increases in unison and keeps the mutual flux ϕ constant. The power input, therefore, automatically increases with the output. For example if K = 2 and I_2 = 2A, then primary will draw a current $I_1 = KI_2 = 2 \times 2 = 4$A. If secondary current is increased to 4A, then primary current will become $I_1 = KI_2 = 2 \times 4 = 8$A.

Phaser diagram: Fig. (7.7 (ii)) shows the phasor diagram of an ideal transformer on load. Note that in drawing the phasor diagram, the value of K has been assumed unity so that primary phasors are equal to secondary phasors. The secondary current I_2 lags behind V_2 (or E_2) by ϕ_2. It causes a primary current $I_2 = KI_2 = 1 \times I_2$ which is in antiphase with it.

(i) $\phi_1 = \phi_2$

or $\cos \phi_1 = \cos \phi_2$

Thus, power factor on the primary side is equal to the power factor on the secondary side.

(ii) Since there are no losses in an ideal transformer, input primary power is equal to the secondary output power i.e.,

$$V_1I_1 \cos\phi_1 = V_2I_2 \cos\phi_2$$

7.8 Practical Transformer on Load

We shall consider two cases (i) when such a transformer is assumed to have no winding resistance and leakage flux (ii) when the transformer has winding resistance and leakage flux.

(i) No winding resistance and leakage flux

Fig. (7.8) shows a practical transformer with the assumption that resistances and leakage reactances of the windings are negligible. With this assumption, $V_2 = E_2$ and $V_1 = E_1$. Let us take the usual case of inductive load which causes the secondary current I_2 to lag the secondary voltage V_2 by ϕ_2. The total primary current I_1 must meet two requirements viz.

(a) It must supply the no-load current I_0 to meet the iron losses in the transformer and to provide flux in the core.

(b) It must supply a current I'_0 to counteract the demagnetizing effect of secondary currently I_2. The magnitude of I'_2 will be such that:

$$N_1 I'_2 = N_2 I_2$$

or $$I'_2 = \frac{N_2}{N_1} I_2 = KI_2$$

The total primary current I_1 is the phasor sum of I'_2 and I_0 i.e.,

$$I_1 = I'_2 + I_0$$

where $$I'_2 = -KI_2$$

Note that I'_2 is 180° out of phase with I_2.

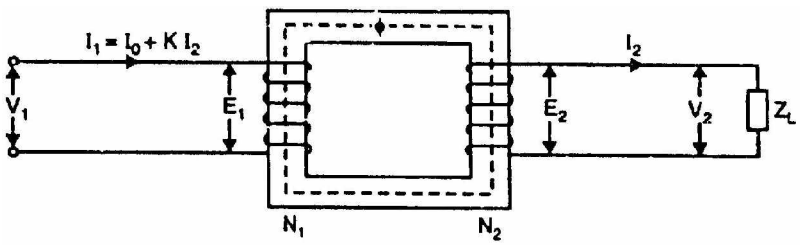

Fig.(7.8)

Phasor diagram. Fig. (7.9) shows the phasor diagram for the usual case of inductive load. Both E_1 and E_2 lag behind the mutual flux ϕ by 90°. The current I'_2 represents the primary current to neutralize the demagnetizing effect of secondary current I_2. Now $I'_2 = K\ I_2$ and is antiphase with I_2. I_0 is the no-load current of the transformer. The phasor sum of I'_2 and I_0 gives the total primary current I_1. Note that in drawing the phasor diagram, the value of K is assumed to be unity so that primary phasors are equal to secondary phasors.

Primary p.f. = $\cos \phi_1$

Secondary p.f. = cos ϕ_2
Primary input power = $V_1 I_1 \cos \phi_1$
Secondary output power = $V_1 I_2 \cos \phi_2$

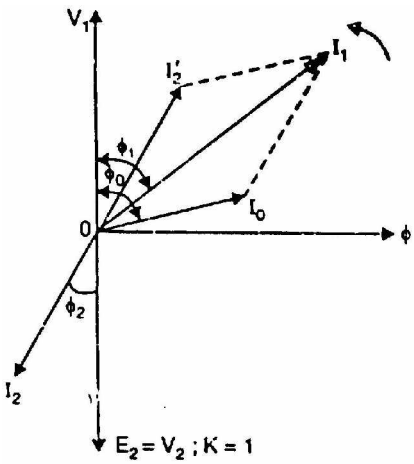

Fig.(7-9)

(ii) Transformer with resistance and leakage reactance

Fig. (7.10) shows a practical transformer having winding resistances and leakage reactances. These are the actual conditions that exist in a transformer. There is voltage drop in R_1 and X_1 so that primary e.m.f. E_1 is less than the applied voltage V_1. Similarly, there is voltage drop in R_2 and X_2 so that secondary terminal voltage V_2 is less than the secondary e.m.f. E_2. Let us take the usual case of inductive load which causes the secondary current I_2 to lag behind the secondary voltage V_2 by ϕ_2. The total primary current I_1 must meet two requirements viz.

(a) It must supply the no-load current I_0 to meet the iron losses in the transformer and to provide flux in the core.

(b) It must supply a current I'_2 to counteract the demagnetizing effect of secondary current I_2. The magnitude of I'_2 will be such that:

$$N_1 I'_2 = N_2 I_2$$

or

$$I'_2 = \frac{N_2}{N_1} I_2 = K I_2$$

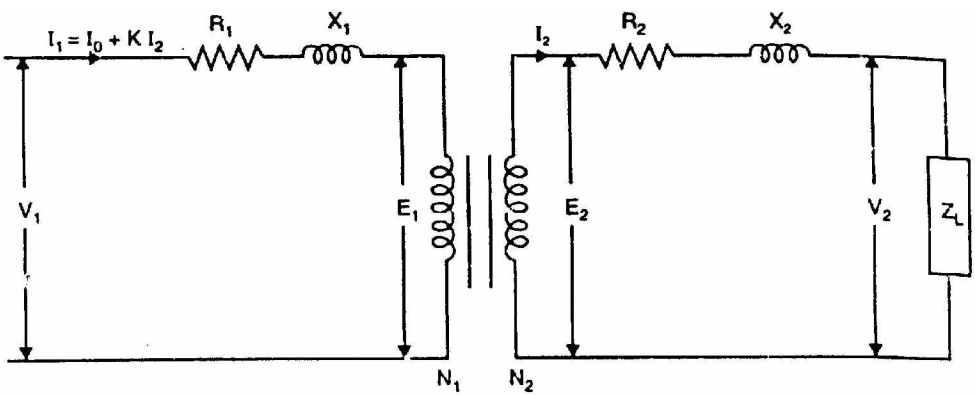

Fig.(7.10)

The total primary current I_1 will be the phasor sum of I'_2 and I_0 i.e.,

$$I_1 = I'_2 + I_0 \quad \text{where} \quad I'_2 = -KI_2$$

$$V_1 = -E_1 + I_1(R_1 + jX_1) \quad \text{where} \quad I_1 = I_0 + (-KI_2)$$

$$= -E_1 + I_1 Z_1$$

$$V_2 = E_2 - I_2(R_2 + jX_2)$$
$$= E_2 - I_2Z_2$$

Phasor diagram. Fig. (7.11) shows the phasor diagram of a practical transformer for the usual case of inductive load. Both E_1 and E_2 lag the mutual flux ϕ by 90°. The current I'_2 represents the primary current to neutralize the demagnetizing effect of secondary current I_2. Now $I'_2 = K\ I_2$ and is opposite to I_2. Also I_0 is the no-load current of the transformer. The phasor sum of I'_2 and I_0 gives the total primary current I_1.

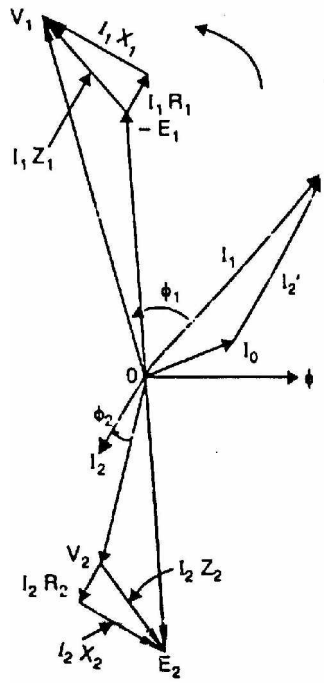

Fig.(7-11)

Note that counter e.m.f. that opposes the applied voltage V_1 is $-E_1$. Therefore, if we add I_1R_1 (in phase with I_1) and $I_1\ X_1$ (90° ahead of I_1) to $-E_1$, we get the applied primary voltage V_1. The phasor E_2 represents the induced e.m.f. in the secondary by the mutual flux ϕ. The secondary terminal voltage V_2 will be what is left over after subtracting I_2R_2 and I_2X_2 from E_2.

Load power factor = $\cos \phi_2$

Primary power factor = $\cos \phi_1$

Input power to transformer, $P_1 = V_1I_1 \cos \phi_1$

Output power of transformer, $P_2 = V_2I_2 \cos \phi_2$

Note: The reader may draw the phasor diagram of a loaded transformer for (i) unity p.f. and (ii) leading p.f. as an exercise.

7.9 Impedance Ratio

Consider a transformer having impedance Z_2 in the secondary as shown in Fig. (7.12).

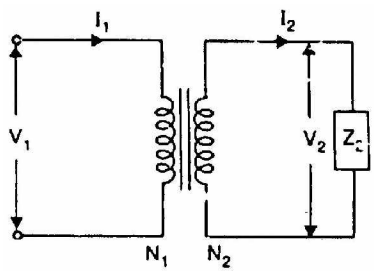

Fig.(7.12)

$$Z_2 = \frac{V_2}{I_2}$$

$$Z_1 = \frac{V_1}{I_1}$$

$$\therefore \quad \frac{Z_2}{Z_1} = \left(\frac{V_2}{V_1}\right) \times \left(\frac{I_1}{I_2}\right)$$

or $$\frac{Z_2}{Z_1} = K^2$$

i.e., impedance ratio (Z_2/Z_1) is equal to the square of voltage transformation ratio. In other words, an impedance Z_2 in secondary becomes Z_2/K^2 when transferred to primary. Likewise, an impedance Z_1 in the primary becomes $K^2 Z_1$ when transferred to the secondary.

Similarly, $\frac{R_2}{R_1} = K^2$ and $\frac{X_2}{X_1} = K^2$

Note the importance of above relations. We can transfer the parameters from one winding to the other. Thus:

(i) A resistance R_1 in the primary becomes $K^2 R_1$ when transferred to the secondary.
(ii) A resistance R_2 in the secondary becomes R_2/K^2 when transferred to the primary.
(iii) A reactance X_1 in the primary becomes $K^2 X_1$ when transferred to the secondary.
(iv) A reactance X_2 in the secondary becomes X_2/K^2 when transferred to the primary.

Note: It is important to remember that:

(i) When transferring resistance or reactance from primary to secondary, multiply it by K^2.
(ii) When transferring resistance or reactance from secondary to primary, divide it by K^2.
(iii) When transferring voltage or current from one winding to the other, only K is used.

7.10 Shifting Impedances in A Transformer

Fig. (7.13) shows a transformer where resistances and reactances are shown external to the windings. The resistance and reactance of one winding can be transferred to the other by appropriately using the factor K^2. This makes the analysis of the transformer a simple affair because then we have to work in one winding only.

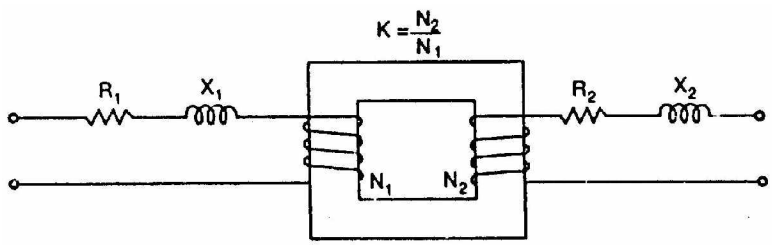

Fig.(7.13)

(i) Referred to primary

When secondary resistance or reactance is transferred to the primary, it is divided by K^2. It is then called equivalent secondary resistance or reactance referred to primary and is denoted by R'_2 or X'_2.

Equivalent resistance of transformer referred to primary

$$R_{01} = R_1 + R'_2 = R_1 + \frac{R_2}{K^2}$$

Equivalent reactance of transformer referred to primary

$$X_{01} = X_1 + X'_2 = X_1 + \frac{X_2}{K^2}$$

Equivalent impedance of transformer referred to primary

$$Z_{01} = \sqrt{R_{01}^2 + X_{01}^2}$$

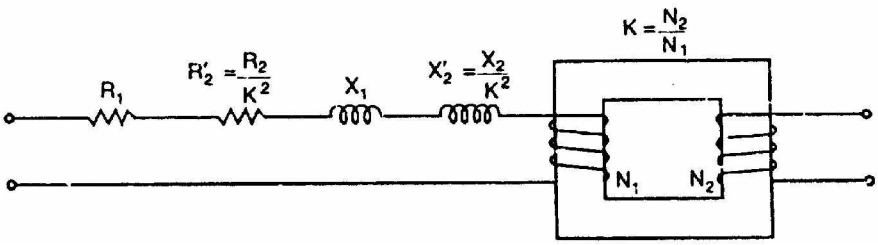

Fig. (7.14)

Fig. (7.14) shows the resistance and reactance of the secondary referred to the primary. Note that secondary now has no resistance or reactance.

(ii) Referred to secondary

When primary resistance or reactance is transferred to the secondary, it is multiplied by K^2. It is then called equivalent primary resistance or reactance referred to the secondary and is denoted by R'_1 or X'_1.

Equivalent resistance of transformer referred to secondary

$$R_{02} = R_2 + R'_1 = R_2 + K^2 R_1$$

Equivalent reactance of transformer referred to secondary

$$X_{02} = X_2 + X'_1 = X_2 + K^2 X_1$$

Equivalent impedance of transformer referred to secondary

$$Z_{02} = \sqrt{R_{02}^2 + X_{02}^2}$$

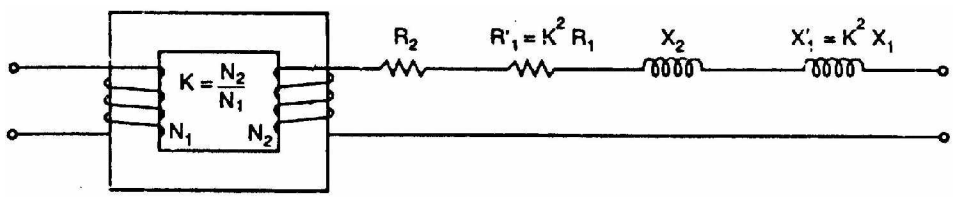

Fig. (7.15)

Fig. (7.15) shows the resistance and reactance of the primary referred to the secondary. Note that primary now has no resistance or reactance.

7.11 Importance of Shifting Impedances

If we shift all the impedances from one winding to the other, the transformer is eliminated and we get an equivalent electrical circuit. Various voltages and currents can be readily obtained by solving this electrical circuit.

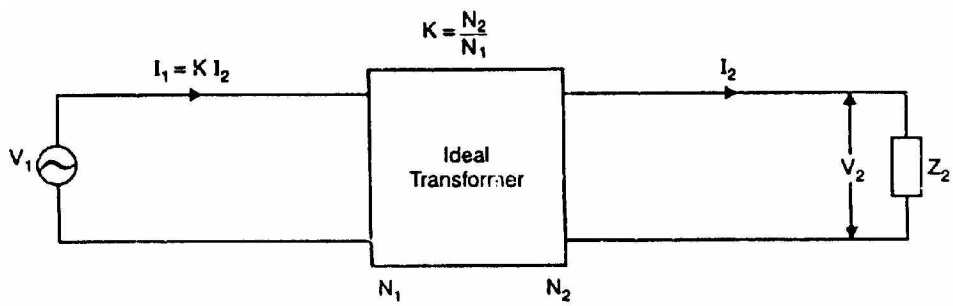

Fig.(7.16)

Consider an ideal transformer having an impedance Z_2 in the secondary as shown in Fig. (7.16).

(i) Referred to primary

When impedance Z_2 in the secondary is transferred to the primary, it becomes Z_2/K^2 as shown in Fig. (7.17 (i)). Note that in Fig. (7.17 (i)), the secondary of the ideal transformer is on open-circuit. Consequently, both primary and secondary currents are zero. We can, therefore, remove the transformer, yielding the equivalent circuit shown in Fig. (7.17 (ii)). The primary current can now be readily found out.

$$I_1 = \frac{V_1}{\left(Z_2 / K^2\right)}$$

The circuits of Fig. (7.16) and Fig. (7.17 (ii)) are electrically equivalent. Thus referring to Fig. (7.16),

$$I_1 = KI_2$$

Also if we refer to Fig. (7.17 (ii)). we have,

$$I_1 = \frac{V_1}{\left(Z_2 / K^2\right)} = \frac{K^2 V_1}{Z_2} = \frac{K(K\ V_1)}{Z_2}$$

$$= K\frac{V_2}{Z_2} = KI_2 \qquad \left(\text{n}\ \ I_2 = \frac{V_2}{Z_2}\right)$$

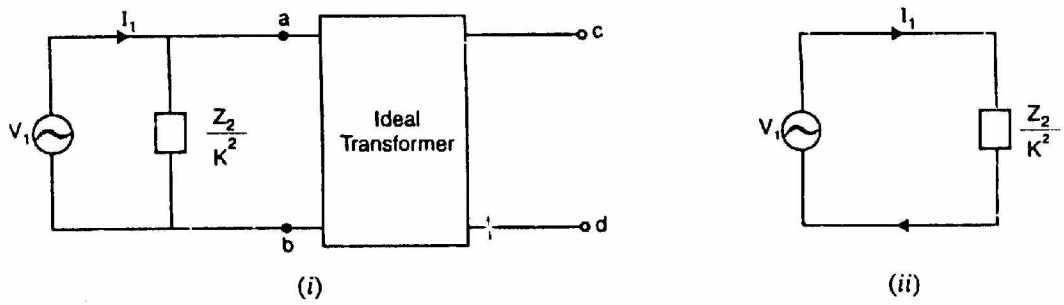

Fig. (7.17)

Thus the value of primary current I_1 is the same whether we use Fig. (7.16) or Fig. (7.17 (ii)). Obviously, it is easier to use Fig. (7.17 (ii)) as it contains no transformer.

(ii) Referred to secondary

Refer back to Fig. (7.16). There is no impedance on the primary side. However, voltage V_1 in the primary when transferred to the secondary becomes K V_1 as shown in Fig. (7.18 (i)). Note that in Fig. (7.18 (ii)), the primary of the transformer is on open circuit. Consequently, both primary and secondary currents are zero. As before, we can remove the transformer yielding the equivalent circuit shown in Fig. (7.18 (ii)). The secondary current I_2 can be readily found out as:

$$I_2 = \frac{K\ V_1}{Z_2}$$

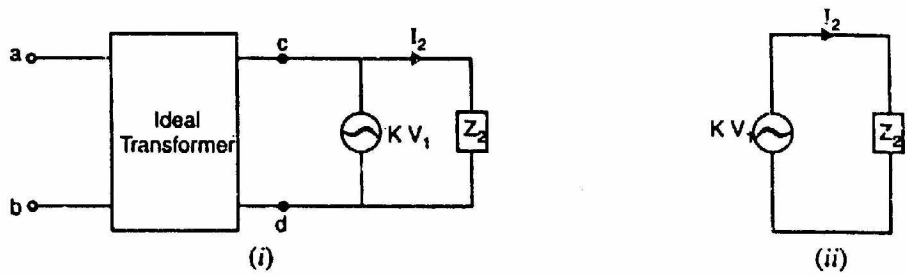

Fig. (7.18)

The circuits of Fig. (7.16) and Fig. (7.18 (ii)) are electrically equivalent. Thus referring back to Fig. (7.16), we have,

$$I_2 = \frac{V_2}{Z_2}$$

Also if we refer to Fig. (7.18 (ii)), we have,

$$I_1 = \frac{K\,V_1}{Z_2} = \frac{K(V_2/K)}{Z_2} = \frac{V_2}{Z_2}$$

Thus the value of secondary current I_2 is the same whether we use Fig. (7.16) or Fig. (7.18 (ii)). Obviously, it is easier to use Fig. (7.18 (ii) as it contains no transformer.

7.12 Exact Equivalent Circuit of a Loaded Transformer

Fig. (7.19) shows the exact equivalent circuit of a transformer on load. Here R_1 is the primary winding resistance and R_2 is the secondary winding resistance. Similarly, X_1 is the leakage reactance of primary winding and X_2 is the leakage reactance of the secondary winding. The parallel circuit $R_0 - X_0$ is the no-load equivalent circuit of the transformer. The resistance R_0 represents the core losses (hysteresis and eddy current losses) so that current I_W which supplies the core losses is shown passing through R_0. The inductive reactance X_0 represents a loss-free coil which passes the magnetizing current I_m. The phasor sum of I_W and I_m is the no-load current I_0 of the transformer.

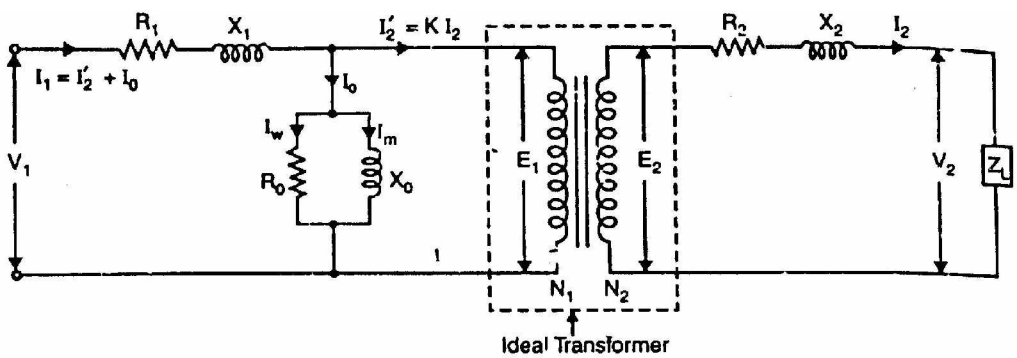

Fig. (7.19)

Note that in the equivalent circuit shown in Fig. (7.19), the imperfections of the transformer have been taken into account by various circuit elements. Therefore, the transformer is now the ideal one. Note that equivalent circuit has created two normal electrical circuits separated only by an ideal transformer whose function is to change values according to the equation:

$$\frac{E_2}{E_1} = \frac{N_2}{N_1} = \frac{I'_2}{I_2}$$

The following points may be noted from the equivalent circuit:

(i) When the transformer is on no-load (i.e., secondary terminals are open-circuited), there is no current in the secondary winding. However, the primary draws a small no-load current I_0. The no-load primary current I_0

is composed of (a) magnetizing current (I_m) to create magnetic flux in the core and (b) the current I_W required to supply the core losses.

(ii) When the secondary circuit of a transformer is closed through some external load Z_L, the voltage E_2 induced in the secondary by mutual flux will produce a secondary current I_2. There will be $I_2 R_2$ and $I_2 X_2$ drops in the secondary winding so that load voltage V_2 will be less than E_2.

$$V_2 = E_2 - I_2(R_2 + j X_2) = E_2 - I_2 Z_2$$

(iii) When the transformer is loaded to carry the secondary current I_2, the primary current consists of two components:

(a) The no-load current I_0 to provide magnetizing current and the current required to supply the core losses.

(b) The primary current I'_2 (= K I_2) required to supply the load connected to the secondary.

$$\therefore \quad \text{Total primary current} \quad I_1 = I_0 + (-KI_2)$$

(iv) Since the transformer in Fig. (7.19) in now ideal, the primary induced voltage E_1 can be calculated from the relation:

$$\frac{E_1}{E_2} = \frac{N_1}{N_2}$$

If we add I_1R_1 and I_1X_1 drops to E_1, we get the primary input voltage V_1

$$V_1 = -E_1 + I_1(R_1 + j X_1) = -E_1 + I_1 Z_1$$

or $$V_1 = -E_1 + I_1 Z_1$$

7.13 Simplified Equivalent Circuit of a Loaded Transformer

The no-load current I_0 of a transformer is small as compared to the rated primary current. Therefore, voltage drops in R_1 and X_1 due to I_0 are negligible. The equivalent circuit shown in Fig. (7.19) above can, therefore, be simplified by transferring the shunt circuit $R_0 - X_0$ to the input terminals as shown in Fig. (7.20). This modification leads to only slight loss of accuracy.

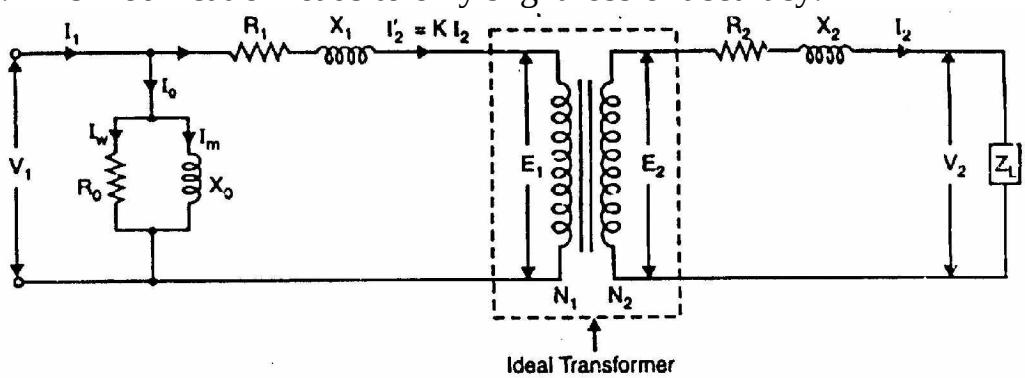

Fig.(7.20)

(i) Equivalent circuit referred to primary

If all the secondary quantities are referred to the primary, we get the equivalent circuit of the transformer referred to the primary as shown in Fig. (7.21 (i)). This further reduces to Fig. (7.21 (ii)). Note that when secondary quantities are referred to primary, resistances/reactances/impedances are divided by K^2, voltages are divided by K and currents are multiplied by K.

$$\therefore \quad K'_2 = \frac{R_2}{K^2}; \quad X'_2 = \frac{X_2}{K^2}; \quad Z'_L = \frac{Z_L}{K^2}; \quad V'_2 = \frac{V_2}{K}; \quad I'_2 = K\, I_2$$

$$Z_{01} = R_{01} + j\, X_{01}$$

where $\quad R_{01} = R_1 + R'_2; \quad X_{01} = X_1 + X'_2$

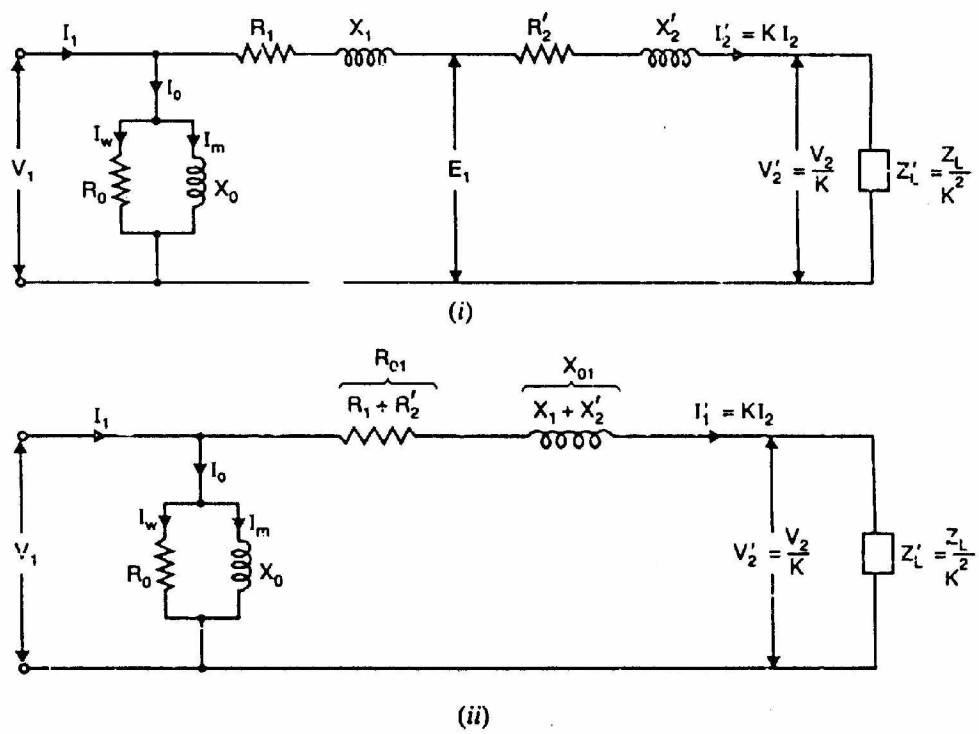

Fig. (7.21)

Phasor diagram. Fig. (7.22) shows the phasor diagram corresponding to the equivalent circuit shown in Fig. (7.21 (ii)). The referred value of load voltage V'_2 is chosen as the reference phasor. The referred value of load current I'_0 is shown lagging V'_2 by phase angle ϕ_2. For a given value of V'_2 both I'_2 and ϕ_2 are determined by the load. The voltage drop $I'_2\, R_{01}$

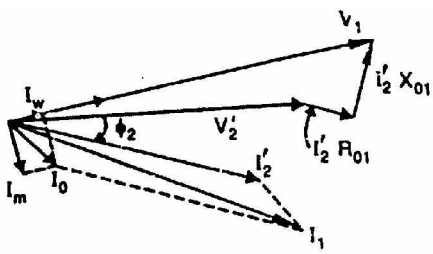

Fig.(7.22)

is in phase with I'_2 and the voltage drop $I'_2 X_{01}$, leads I'_2 by 90°. When these voltage drops are added to V'_2, we get the input voltage V_1.

The current I_W is in phase with V_1 while the magnetization current I_m lags behind V_1 by 90°. The phasor sum of I_W and I_m is the no-load current I_0. The phasor sum of I_0 and I'_2 is the input current I_1.

(ii) Equivalent circuit referred to secondary.

If all the primary quantities are referred to secondary, we get the equivalent circuit of the transformer referred to secondary as shown in Fig. (7.23 (i)). This further reduces to Fig. (7.23 (ii)). Note that when primary quantities are referred to secondary resistances/reactances/impedances are multiplied by K^2, voltages are multiplied by K. and currents are divided by K.

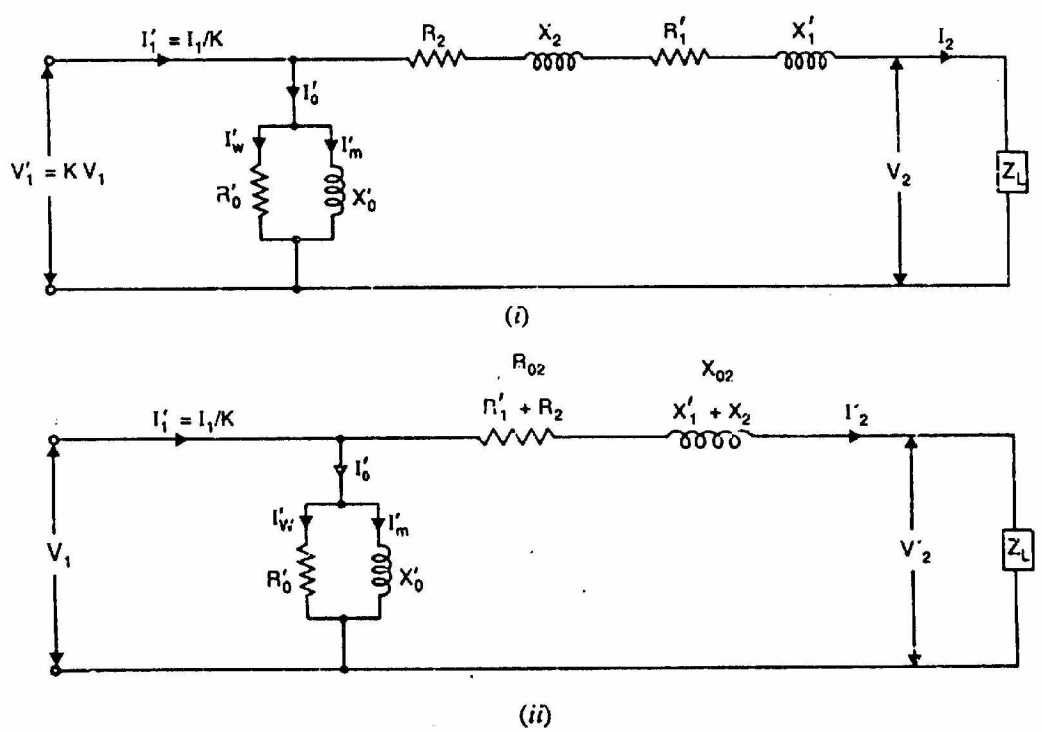

Fig. (7.23)

$$\therefore \quad R'_1 = K^2 R_1; \qquad X'_1 = K^2 X_1; \qquad V'_2 = K\,V_1; \;\; I'_1 = \frac{I_1}{K}$$

$$Z_{02} = R_{02} + j\,X_{02}$$

where $\quad R_{02} = R_2 + R'_1; \quad X_{02} = X_2 + X'_1$

Phasor diagram. Fig. (7.24) shows the phasor diagram of the equivalent circuit shown in Fig. (7.23 (ii)). The load voltage V_2 is chosen as the

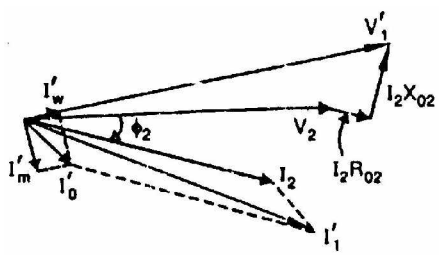

Fig.(7-24)

reference phasor. The load current I_2 is shown lagging the load voltage V_2 by phase angle ϕ_2. The voltage drop $I_2 R_{02}$ is in phase with I_2 and the voltage drop $I_2 X_{02}$ leads I_2 by 90°. When these voltage drop are added to V_2, we get the referred primary voltage V'_1 (= KV_1).

The current I'_W is in phase with V'_1 while the magnetizing current I'_m lags behind V'_1 by 90°. The phasor sum of I'_W and I'_m gives the referred value of no-load current I'_0. The phasor sum of I'_0 and load current I_2 gives the referred primary current I'_1 (= I_1/K).

7.14 Approximate Equivalent Circuit of a Loaded Transformer

The no-load current I_0 in a transformer is only 1-3% of the rated primary current and may be neglected without any serious error. The transformer can then be shown as in Fig. (7.25). This is an approximate representation because no-load current has been neglected. Note that all the circuit elements have been shown external so that the transformer is an ideal one.

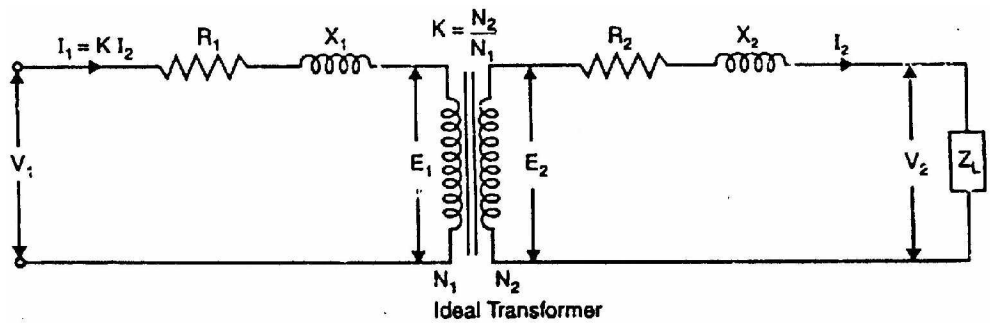

Fig. (7.25)

As shown in Sec. 7.11, if we refer all the quantities to one side (primary or secondary), the ideal transformer stands removed and we get the equivalent circuit.

(i) Equivalent circuit of transformer referred to primary

If all the secondary quantities are referred to the primary, we get the equivalent circuit of the transformer referred to primary as shown in Fig. (7.26). Note that when secondary quantities are referred to primary, resistances/reactances are divided by K^2, voltages are divided by K and currents are multiplied by K.

The equivalent circuit shown in Fig. (7.26) is an electrical circuit and can be solved for various currents and voltages. Thus if we find V'_2 and I'_2, then actual secondary values can be determined as under:

Actual secondary voltage, $V_2 = K\,V'_2$

Actual secondary current, $I_2 = I'_2/K$

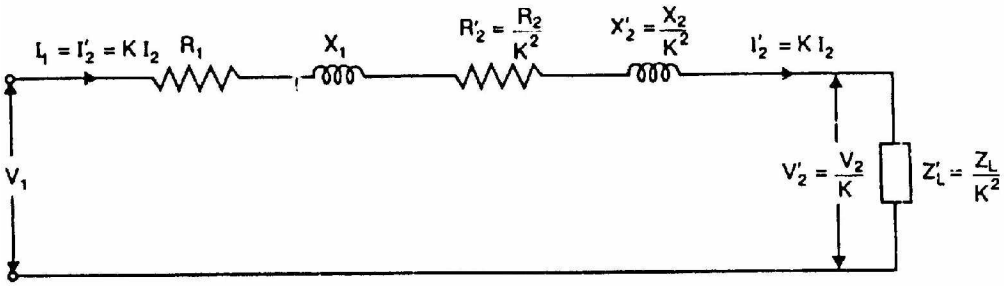

Fig.(7.26)

(ii) Equivalent circuit of transformer referred to secondary

If all the primary quantities are referred to secondary, we get the equivalent circuit of the transformer referred to secondary as shown in Fig. (7.27). Note that when primary quantities are referred to secondary, resistances/reactances are multiplied by K^2, voltages are multiplied by K and currents are divided by K.

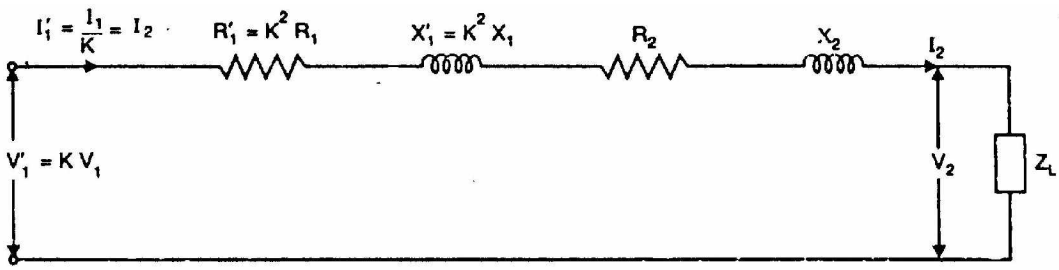

Fig. (7.27)

The equivalent circuit shown in Fig. (7.27) is an electrical circlet and can be solved for various voltages and currents. Thus is we find V'_1 and I'_1, then actual primary values can be determined as under:

Actual primary voltage, $V_1 = V'_1/K$

Actual primary current, $I_1 = KI'_1$

Note: The same final answers will be obtained whether we use the equivalent circuit referred to primary or secondary. The use of a particular equivalent circuit would depend upon the conditions of the problem.

7.15 Approximate Voltage Drop in a Transformer

The approximate equivalent circuit of transformer referred to secondary is shown in Fig. (7.28). At no-load, the secondary voltage is $K V_1$. When a load having a lagging p.f. $\cos \phi_2$ is applied, the secondary carries a current I_2 and voltage drops occur in $(R_2 + K^2 R_1)$ and $(X_2 + K^2 X_1)$. Consequently, the secondary voltage falls from $K V_1$ to V_2. Referring to Fig. (7.28), we have,

$$V_2 = KV_1 - I_2\left[\left(R_2 + K^2R_1\right) + j\left(X_2 + K^2X_1\right)\right]$$
$$= KV_1 - I_2\left(R_{02} + j\,X_{02}\right)$$
$$= KV_1 - V_2 = I_2Z_{02}$$

$$\text{Drop in secondary voltage} = KV_1 - V_2 = I_2Z_{02}$$

The phasor diagram is shown in Fig. (7.29). It is clear from the phasor diagram that drop in secondary voltage is AC = $I_2\ Z_{02}$. It can be found as follows. With O as centre and OC as radius, draw an arc cutting OA produced at M. Then AC = AM = AN. From B, draw BD perpendicular to OA produced. Draw CN perpendicular to OM and draw BL ∥ OM.

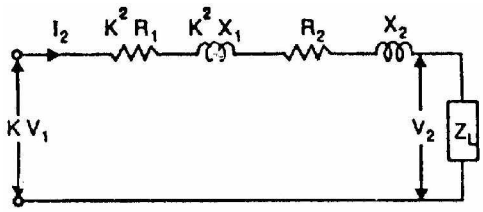

Fig.(7.28)

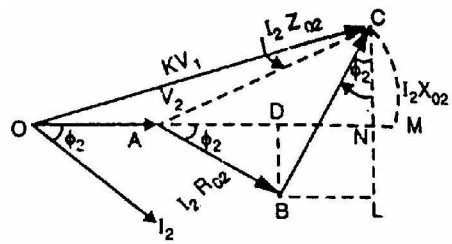

Fig.(7.29)

Approximate drop in secondary voltage

$$= AN = AD + DN$$
$$= AD + BL \qquad (\because\ BL = DN)$$
$$= I_2R_{02}\cos\phi_2 + I_2X_{02}\sin\phi_2$$

For a load having a leading p.f. cos ϕ_2, we have,

$$\text{Approximate voltage drop} = I_2R_{02}\cos\phi_2 - I_2X_{02}\sin\phi_2$$

Note: If the circuit is referred to primary, then it can be easily established that:

$$\text{Approximate voltage drop} = I_1R_{01}\cos\phi_2 \pm I_1X_{01}\sin\phi_2$$

7.16 Voltage Regulation

The voltage regulation of a transformer is the arithmetic difference (not phasor difference) between the no-load secondary voltage ($_0V_2$) and the secondary voltage V_2 on load expressed as percentage of no-load voltage i.e.

$$\text{\%age voltage regulation} = \frac{_0V_2 - V_2}{_0V_2} \times 100$$

where $_0V_2$ = No-load secondary voltage = K V_1
V_2 = Secondary voltage on load

As shown in Sec. 7.15

$$_0V_2 - V_2 = I_2R_{02}\cos\phi_2 \pm I_2X_{02}\sin\phi_2$$

The +ve sign is for lagging p.f. and –ve sign for leading p.f.

It may be noted that %age voltage regulation of the transformer will be the same whether primary or secondary side is considered.

7.17 Transformer Tests

The circuit constants, efficiency and voltage regulation of a transformer can be determined by two simple tests (i) open-circuit test and (ii) short-circuit lest. These tests are very convenient as they provide the required information without actually loading the transformer. Further, the power required to carry out these tests is very small as compared with full-load output of the transformer. These tests consist of measuring the input voltage, current and power to the primary first with secondary open-circuited (open-circuit test) and then with the secondary short-circuited (short circuit test).

7.18 Open-Circuit or No-Load Test

This test is conducted to determine the iron losses (or core losses) and parameters R_0 and X_0 of the transformer. In this test, the rated voltage is applied to the primary (usually low-voltage winding) while the secondary is left open-circuited. The applied primary voltage V_1 is measured by the voltmeter, the no-load current I_0 by ammeter and no-load input power W_0 by wattmeter as shown in Fig. (7.30 (i)). As the normal rated voltage is applied to the primary, therefore, normal iron losses will occur in the transformer core. Hence wattmeter will record the iron losses and small copper loss in the primary. Since no-load current I_0 is very small (usually 2-10 % of rated current). Cu losses in the primary under no-load condition are negligible as compared with iron losses. Hence, wattmeter reading practically gives the iron losses in the transformer. It is reminded that iron losses are the same at all loads. Fig. (7.30 (ii)) shows the equivalent circuit of transformer on no-load.

Iron losses, P_i = Wattmeter reading = W_0
No load current = Ammeter reading = I_0
Applied voltage = Voltmeter reading = V_1
Input power, W_0 = $V_1 I_0 \cos\phi_0$

$$\therefore \quad \text{No-load p.f.,} \quad \cos\phi_0 = \frac{W_0}{V_1 I_0}$$

$$I_W = I_0 \cos\phi_0; \qquad I_m = I_0 \sin\phi_0$$

$$R_0 = \frac{V_1}{I_W} \quad \text{and} \quad X_0 = \frac{V_1}{I_m}$$

Thus open-circuit test enables us to determine iron losses and parameters R_0 and X_0 of the transformer.

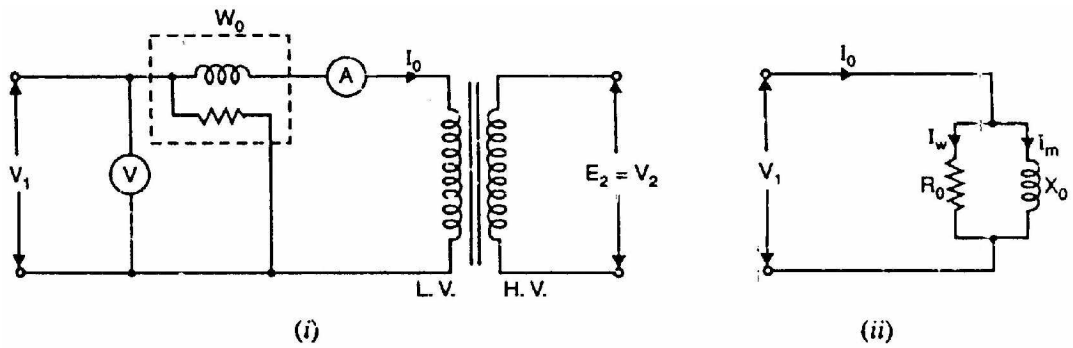

Fig.(7.30)

7.19 Short-Circuit or Impedance Test

This test is conducted to determine R_{01} (or R_{02}), X_{01} (or X_{02}) and full-load copper losses of the transformer. In this test, the secondary (usually low-voltage winding) is short-circuited by a thick conductor and variable low voltage is applied to the primary as shown in Fig. (7.31 (i)). The low input voltage is gradually raised till at voltage V_{SC}, full-load current I_1 flows in the primary. Then I_2 in the secondary also has full-load value since $I_1/I_2 = N_2/N_1$. Under such conditions, the copper loss in the windings is the same as that on full load.

There is no output from the transformer under short-circuit conditions. Therefore, input power is all loss and this loss is almost entirely copper loss. It is because iron loss in the core is negligibly small since the voltage V_{SC} is very small. Hence, the wattmeter will practically register the full-load copper losses in the transformer windings. Fig. (7.31 (ii)) shows the equivalent circuit of a transformer on short circuit as referred to primary; the no-load current being neglected due to its smallness.

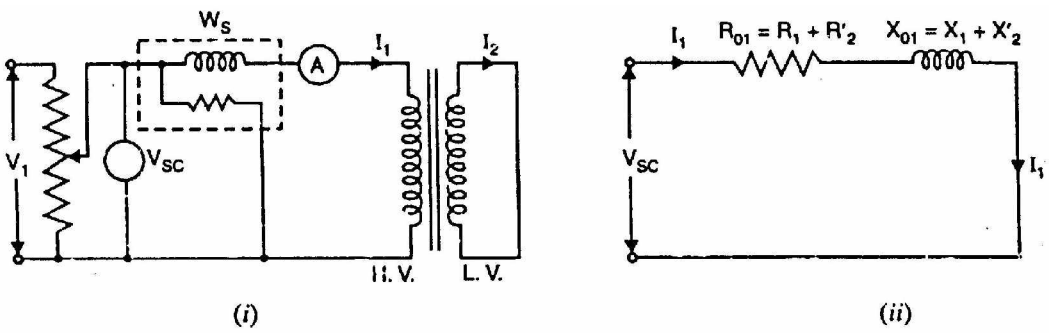

Fig. (7.31)

Full load Cu loss, P_C = Wattmeter reading = W_S
Applied voltage = Voltmeter reading = V_{SC}
F.L. primary current = Ammeter reading = I_1

$$P_C = I_1^2 R_1 + I_1^2 R'_2 = I_1^2 R_{01}$$

$$\therefore \quad R_{01} = \frac{P_C}{I_1^2}$$

where R_{01} is the total resistance of transformer referred to primary.

Total impedance referred to primary, $Z_{01} = \dfrac{V_{SC}}{I_1}$

Total leakage reactance referred to primary, $X_{01} = \sqrt{Z_{01}^2 - R_{01}^2}$

Short-circuit p.f, $\cos\phi_2 = \dfrac{P_C}{V_{SC} I_1}$

Thus short-circuit lest gives full-load Cu loss, R_{01} and X_{01}.

Note: The short-circuit test will give full-load Cu loss only if the applied voltage V_{SC} is such so as to circulate full-load currents in the windings. If in a short-circuit test, current value is other than full-load value, the Cu loss will be corresponding to that current value.

7.20 Advantages of Transformer Tests

The above two simple transformer tests offer the following advantages:

(i) The power required to carry out these tests is very small as compared to the full-load output of the transformer. In case of open-circuit lest, power required is equal to the iron loss whereas for a short-circuit test, power required is equal to full-load copper loss.

(ii) These tests enable us to determine the efficiency of the transformer accurately at any load and p.f. without actually loading the transformer.

(iii) The short-circuit test enables us to determine R_{01} and X01 (or R_{02} and X_{02}). We can thus find the total voltage drop in the transformer as

referred to primary or secondary. This permits us to calculate voltage regulation of the transformer.

7.21 Separation of Components of Core Losses

The core losses (or iron losses) consist of hysteresis loss and eddy current loss. Sometimes it is desirable to find the hysteresis loss component and eddy current loss component in the total core losses.

Hysteresis loss, $P_h = k_h\ f\ B_m^{1.6}$ watts/m^3

Eddy current loss, $P_e = k_e\ f^2\ B_m^2 t^2$ watts/m^3

where B_m = maximum flux density; f = frequency; k_h, k_e = constants

For a given a.c. machine and maximum flux density (B_m),

$$P_h \propto f \quad \text{and} \quad P_e \propto f^2$$

or

$$P_h = a\ f \quad \text{and} \quad P_e = b\ f^2$$

where a and b are constants.

Total core loss, $P_i = af + bf^2$

Hence if the total core loss for given B_m is known at two frequencies, the constants a and b can be calculated. Knowing the values of a and b, the hysteresis loss component and eddy current loss component of the core loss can be determined.

P_t/f and f curve

$$P_i = af + bf^2$$

or

$$\frac{P_i}{f} = a + bf$$

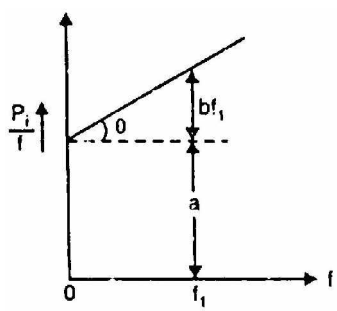

Fig.(7.32)

The total core losses are measured at various frequencies while the other factors upon which core losses depend are maintained constant. If a graph is plotted between P_i/f and f, it will be a straight line with slope tan θ = b (See Fig. 7.32). Therefore, constants a and b can be evaluated. Hence the hysteresis and eddy current losses at a given frequency (say f_1) can be found out.

7.22 Why Transformer Rating in kVA?

An important factor in the design and operation of electrical machines is the relation between the life of the insulation and operating temperature of the machine. Therefore, temperature rise resulting from the losses is a determining factor in the rating of a machine. We know that copper loss in a transformer depends on current and iron loss depends on voltage. Therefore, the total loss in a transformer depends on the volt-ampere product only and not on the phase angle between voltage and current i.e., it is independent of load power factor. For this reason, the rating of a transformer is in kVA and not kW.

7.23 Sumpner or Back-to-Back Test

This test is conducted simultaneously on two identical transformers and provides data for finding the efficiency, regulation and temperature rise. The main advantage of this test is that the transformers are tested under full-load conditions without much expenditure of power. The power required to conduct this test is equal to the losses of the two transformers. It may be noted that two identical transformers are needed to carry out this test.

Circuit

Fig. (7.33) shows the connections for back-to-back test on two identical transformers T_1 and T_2. The primaries of the two transformers are connected in parallel across the rated voltage V_1 while the two secondaries are connected in phase opposition. Therefore, there will be no circulating current in the loop formed by the secondaries because their induced e.m.f.s are equal and in opposition. There is an auxiliary low-voltage transformer which can be adjusted to give a variable voltage and hence current in the secondary loop circuit. A wattmeter W_1, an ammeter A_1 and voltmeter V_1 are connected to the input side. A wattmeter W_2 and ammeter A_2 are connected in the secondary circuit.

Operation

(i) The secondaries of the transformers are in phase opposition. With switch S_1 closed and switch S_2 open (i.e., regulating transformer not in the circuit), there will be no circulating current ($I_2 = 0$) in the secondary loop circuit. It is because the induced e.m.f.s in the secondaries are equal and in opposition. This situation is just like an open-circuit test. Therefore, the current drawn from the supply is $2\ I_0$ where I_0 is the no-load current of each transformer. The reading of wattmeter W_1 will be equal to the core losses of the two transformers.

$$W_1 = \text{Core losses of the two transformers}$$

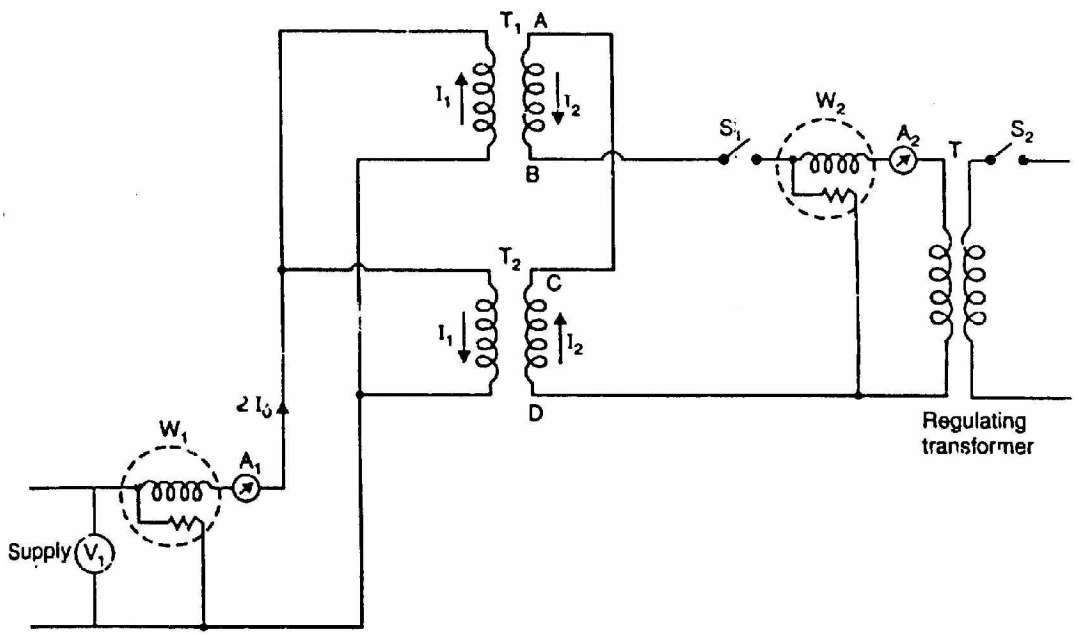

Fig.(7.33)

(ii) Now switch S_2 is also closed and output voltage of the regulating transformer is adjusted till full-load current I_2 flows in the secondary loop circuit. The full-load secondary current will cause full-load current I_1 (= K I_2) in the primary circuit. The primary current I_1 circulates in the primary winding only and will not pass through W_1. Note that full-load currents are flowing through the primary and secondary windings. Therefore, reading of wattmeter W_2 will be equal to the full-load copper losses of the two transformers.

W_2 = Full-load Cu losses of two transformers

$\therefore$ $W_1 + W_2$ = Total losses of two transforms at full load

The following points may be noted:

(a) The wattmeter W_1 gives the core losses of the two transformers while wattmeter W_2 gives the full-load copper losses (or at any other load current I_2) of the two transformers. Therefor, power required to conduct this test is equal to the total losses of the two transformers.

(b) Although transformers are not supplying any load, yet full iron loss and full-load copper losses are occurring in them.

(c) There are two voltage sources (supply voltage and regulating transformer) and there is no Interference between them. The supply voltage gives only $2I_0$ while regulating transformer supplies I_2 and hence I_1 (= K I_2).

Advantages

(i) The power required to carry out the test is small.

(ii) The transformers are tested under full-load conditions.

(iii) The iron losses and full-load copper losses are measured simultaneously.
(iv) The secondary current I_2 can be adjusted to any current value. Therefore, we can find the copper loss at full-load or at any other load.
(v) The temperature rise of the transformers can be noted.

7.24 Losses in a Transformer

The power losses in a transformer are of two types, namely;

1. Core or Iron losses 2. Copper losses

These losses appear in the form of heat and produce (i) an increase in temperature and (ii) a drop in efficiency.

1. Core or Iron losses (P_i)

These consist of hysteresis and eddy current losses and occur in the transformer core due to the alternating flux. These can be determined by open-circuit test.

$$\text{Hysteresis loss, } = k_h \; f \; B_m^{1.6} \quad \text{watts/m}^3$$

$$\text{Eddy current loss, } = k_e \; f^2 \; B_m^2 t^2 \qquad \text{watts/m}^3$$

Both hysteresis and eddy current losses depend upon (i) maximum flux density B_m in the core and (ii) supply frequency f. Since transformers are connected to constant-frequency, constant voltage supply, both f and B_m are constant. Hence, core or iron losses are practically the same at all loads.

$$\text{Iron or Core losses, } P_i = \text{Hysteresis loss} + \text{Eddy current loss}$$

$$= \text{Constant losses}$$

The hysteresis loss can be minimized by using steel of high silicon content whereas eddy current loss can be reduced by using core of thin laminations.

2. Copper losses

These losses occur in both the primary and secondary windings due to their ohmic resistance. These can be determined by short-circuit test.

Total Cu losses, $P_C = I_1^2 R_1 + I_2^2 R_2$

$$= I_1^2 R_{01} \text{ or } I_2^2 R_{02}$$

It is clear that copper losses vary as the square of load current Thus if copper losses are 400 W at a load current of 10 A, then they will be $(1/2)^2 \times 400 = 100$ W at a load current of 5A.

Total losses in a transformer = $P_1 + P_C$

= Constant losses + Variable losses

It may be noted that in a transformer, copper losses account for about 90% of the total losses.

7.25 Efficiency of a Transformer

Like any other electrical machine, the efficiency of a transformer is defined as the ratio of output power (in watts or kW) to input power (watts or kW) i.e.,

$$\text{Efficiency} = \frac{\text{Output power}}{\text{Input power}}$$

It may appear that efficiency can be determined by directly loading the transformer and measuring the input power and output power. However, this method has the following drawbacks:

(i) Since the efficiency of a transformer is very high, even 1% error in each wattmeter (output and input) may give ridiculous results. This test, for instance, may give efficiency higher than 100%.

(ii) Since the test is performed with transformer on load, considerable amount of power is wasted. For large transformers, the cost of power alone would be considerable.

(iii) It is generally difficult to have a device that is capable of absorbing all of the output power.

(iv) The test gives no information about the proportion of various losses.

Due to these drawbacks, direct loading method is seldom used to determine the efficiency of a transformer. In practice, open-circuit and short-circuit tests are carried out to find the efficiency.

$$\text{Efficiency} = \frac{\text{Output}}{\text{Input}} = \frac{\text{Output}}{\text{Output} + \text{Losses}}$$

The losses can be determined by transformer tests.

7.26 Efficiency from Transformer Tests

F.L. Iron loss = P_1 ...from open-circuit test

F.L. Cu loss = P_C ...from short-circuit test

Total F.L. losses = $P_1 + P_C$

We can now find the full-load efficiency of the transformer at any p.f. without actually loading the transformer.

$$\text{F.L. efficiency, } \eta_{F.L.} = \frac{\text{Full - load VA} \times \text{p.f.}}{(\text{Full - load VA} \times \text{p.f.}) + P_i + P_C}$$

Also for any load equal to x x full-load,

Corresponding total losses = $P_i + x^2 P_C$

$$\text{Corresponding } \eta_x = \frac{(\text{xx Full - load VA}) \times \text{p.f.}}{(\text{xx Full - load VA} \times \text{p.f.}) + P_i + x^2 P_C}$$

Note that iron loss remains the same at all loads.

7.27 Condition for Maximum Efficiency

Output power = $V_2 I_2 \cos \phi_2$

If R_{02} is the total resistance of the transformer referred to secondary, then,

Total Cu loss, $P_C = I_2^2 R_{02}$

Total losses = $P_i + P_C$

$$\therefore \quad \text{Transformer } \eta = \frac{V_2 I_2 \cos\phi_2}{V_2 I_2 \cos\phi_2 + P_i + I_2^2 R_{02}}$$

$$= \frac{V_2 \cos\phi_2}{V_2 \cos\phi_2 + P_i / I_2 + I_2 R_{02}} \qquad \text{(i)}$$

For a normal transformer, V_2 is approximately constant. Hence for a load of given p.f., efficiency depends upon load current I_2. It is clear from exp (i) above that numerator is constant and for the efficiency to be maximum, the denominator should be minimum i.e.,

$$\frac{d}{dI_2}(\text{denominator}) = 0$$

or

$$\frac{d}{dI_2}\left(V_2 \cos\phi_2 + P_i / I_2 + I_2 R_{02}\right) = 0$$

or $$0 - \frac{P_i}{I_2^2} + R_{02} = 0$$

or $$P_i = I_2^2 R_{02} \qquad \text{(ii)}$$

i.e., Iron losses = Copper losses

Hence efficiency of a transformer will be maximum when copper losses are equal to constant or iron losses.

From eq. (ii) above, the load current I_2 corresponding to maximum efficiency is given by;

$$I_2 = \sqrt{\frac{P_i}{R_{02}}}$$

The relative value of these losses is in the control of the designer of the transformer according to the relative amount of copper and iron he uses. A transformer which is to operate continuously on full-load would, therefore, be designed to have-maximum efficiency at full-load. However, distribution transformers operate for long periods on light load. Therefore, their point of maximum efficiency is usually arranged to be between three-quarter and half lull-load.

Note. In a transformer, iron losses are constant whereas copper losses are variable. In order to obtain maximum efficiency, the load current should be such that total Cu losses become equal to iron losses.

7.28 Output kVA Corresponding to Maximum Efficiency

Let P_C = Copper losses at full-load kVA

P_i = Iron losses

x = Fraction of full-load kVA at which efficiency is maximum

Total Cu losses = $x^2 P_C$

$x^2 P_C = P_i$ ...for maximum efficiency

or $$x = \sqrt{\frac{P_i}{P_C}} = \sqrt{\frac{\text{Iron loss}}{\text{F.L. Cu loss}}}$$

$\therefore$ Output kVA corresponding to maximum efficiency

$$= \text{xx Full - load kVA} = \text{Full - load kVA} \times \sqrt{\frac{\text{Iron loss}}{\text{F.L. Cu loss}}}$$

It may be noted that the value of kVA at which the efficiency is maximum is independent of p.f. of the load.

7.29 All-Day (or Energy) Efficiency

The ordinary or commercial efficiency of a transformer is defined as the ratio of output power to the input power i.e.,

$$\text{Commercial efficiency} = \frac{\text{Output power}}{\text{Input power}}$$

There are certain types of transformers whose performance cannot be judged by this efficiency. For instance, distribution transformers used for supplying lighting loads have their primaries energized all the 24 hours in a day but the secondaries supply little or no load during the major portion of the day. It means that a constant loss (i.e., iron loss) occurs during the whole day but copper loss occurs only when the transformer is loaded and would depend upon the magnitude of load. Consequently, the copper loss varies considerably during the day and the commercial efficiency of such transformers will vary from a low value (or even zero) to a high value when the load is high. The performance of such transformers is judged on the basis of energy consumption during the whole day (i.e., 24 hours). This is known as all-day or energy efficiency.

The ratio of output in kWh to the input in kWh of a transformer over a 24-hour period is known as all-day efficiency i.e.,

$$\eta_{\text{all-day}} = \frac{\text{kWh output in 24 hours}}{\text{kWh input in 24 hours}}$$

All-day efficiency is of special importance for those transformers whose primaries are never open-circuited but the secondaries carry little or no load much of the time during the day. In the design of such transformers, efforts should be made to reduce the iron losses which continuously occur during the whole day.

Note. Efficiency of a transformer means commercial efficiency unless stated otherwise.

7.30 Construction of a Transformer

We usually design a power transformer so that it approaches the characteristics of an ideal transformer. To achieve this, following design features are incorporated:

(i) The core is made of silicon steel which has low hysteresis loss and high permeability. Further, core is laminated in order to reduce eddy current loss. These features considerably reduce the iron losses and the no-load current.

(ii) Instead of placing primary on one limb and secondary on the other, it is a usual practice to wind one-half of each winding on one limb. This ensures tight coupling between the two windings. Consequently, leakage flux is considerably reduced.

(iii) The winding resistances R_1 and R_2 are minimized to reduce I^2R loss and resulting rise in temperature and to ensure high efficiency.

7.31 Types of Transformers

Depending upon the manner in which the primary and secondary are wound on the core, transformers are of two types viz., (i) core-type transformer and (ii) shell-type transformer.

(i) **Core-type transformer**. In a core-type transformer, half of the primary winding and half of the secondary winding are placed round each limb as shown in Fig. (7.34). This reduces the leakage flux. It is a usual practice to place the low-voltage winding below the high-voltage winding for mechanical considerations.

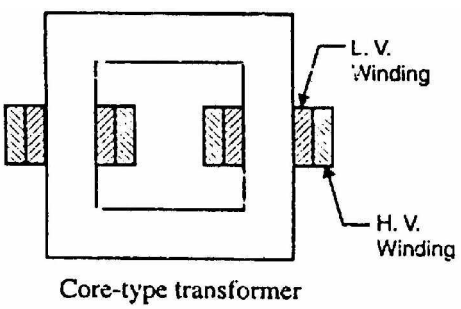

Fig.(7.34)

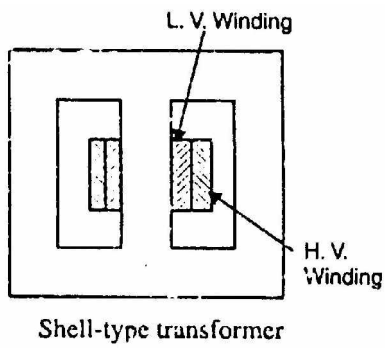

Fig.(7.35)

(ii) **Shell-type transformer**. This method of construction involves the use of a double magnetic circuit. Both the windings are placed round the central limb (See Fig. 7.35), the other two limbs acting simply as a low-reluctance flux path.

The choice of type (whether core or shell) will not greatly affect the efficiency of the transformer. The core type is generally more suitable for high voltage and small output while the shell-type is generally more suitable for low voltage and high output.

7.32 Cooling of Transformers

In all electrical machines, the losses produce heat and means must be provided to keep the temperature low. In generators and motors, the rotating unit serves as a fan causing air to circulate and carry away the heat. However, a transformer has no rotating parts. Therefore, some other methods of cooling must be used. Heat is produced in a transformer by the iron losses in the core and I^2R loss in the windings. To prevent undue temperature rise, this heat is removed by cooling.

(i) In small transformers (below 50 kVA), natural air cooling is employed i.e., the heat produced is carried away by the surrounding air.

(ii) Medium size power or distribution transformers are generally cooled by housing them in tanks filled with oil. The oil serves a double purpose, carrying the heat from the windings to the surface of the tank and insulating the primary from the secondary.

(iii) For large transformers, external radiators are added to increase the cooling surface of the oil filled tank. The oil circulates around the transformer and moves through the radiators where the heat is released to surrounding air. Sometimes cooling fans blow air over the radiators to accelerate the cooling process.

7.33 Autotransformer

An autotransformer has a single winding on an iron core and a part of winding is common to both the primary and secondary circuits. Fig. (7.36 (i)) shows the connections of a step-down autotransformer whereas Fig. (7.36 (ii)) shows the connections of a step-up autotransformer. In either case, the winding ab having N_1 turns is the primary winding and winding be having N_2 turns is the secondary winding. Note that the primary and secondary windings are connected electrically as well as magnetically. Therefore, power from the primary is transferred to the secondary conductively as well as inductively (transformer action). The voltage transformation ratio K of an ideal autotransformer is

$$K = \frac{V_2}{V_1} = \frac{N_2}{N_1} = \frac{I_1}{I_2}$$

Note that in an autotransformer, secondary and primary voltages are related in the same way as in a 2-winding transformer.

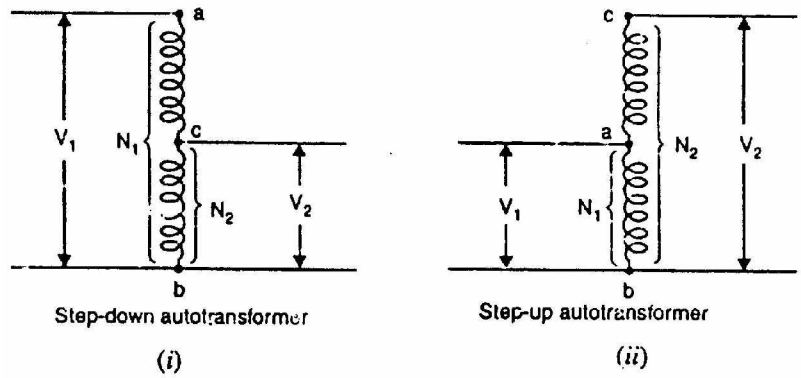

Fig.(7.36)

Fig. (7.37) shows the connections of a loaded step-down as well as step-up autotransformer. In each case, I_1 is the input current and I_2 is the output or load current. Regardless of autotransformer connection (step-up or step-down), the current in the portion of the winding that is common to both the primary and the secondary is the difference between these currents (I_1 and I_2). The relative direction of the current through the common portion of the winding depends upon the connections of the autotransformer. It is because the type of connection determines whether input current I_1 or output current I_2 is larger. For step-down autotransformer $I_2 > I_1$ (as for 2-winding transformer) so that $I_2 - I_1$ current flows through the common portion of the winding. For step-up autotransformer, $I_2 < I_1$. Therefore, $I_1 - I_2$ current flews in the common portion of the winding.

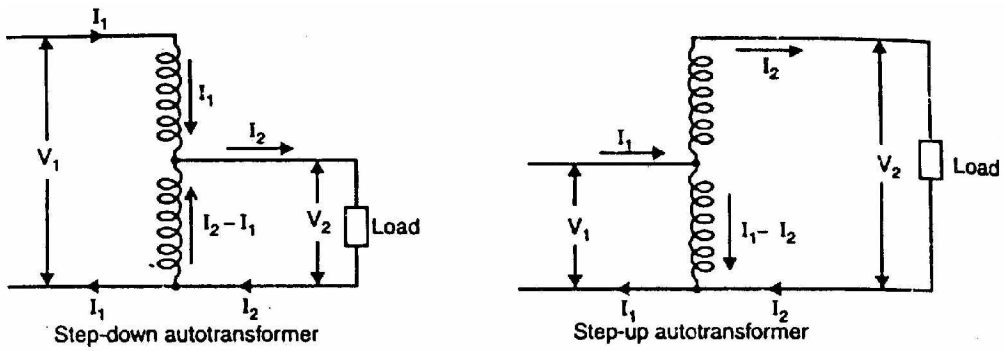

Fig.(7.37)

In an ideal autotransformer, exciting current and losses are neglected. For such an autotransformer, as K approaches 1, the value of current in the common portion ($I_2 - I_1$ or $I_1 - I_2$) of the winding approaches zero. Therefore, for value of K near unity, the common portion of the winding can be wound with wire of smaller cross-sectional area. For this reason, an autotransformer requires less copper.

7.34 Theory of Autotransformer

Fig. (7.38 (i)) shows an ideal step-down autotransformer on load. Here winding 1-3 having N_1 turns is the primary winding while winding 2-3 having N_2 turns is the secondary winding. The input current is I_1 while the output or load current is I_2. Note that portion 1-2 of the winding has $N_1 - N_2$ turns and voltage across this portion of the winding is $V_1 - V_2$. The current through the common portion of the winding is $I_2 - I_1$.

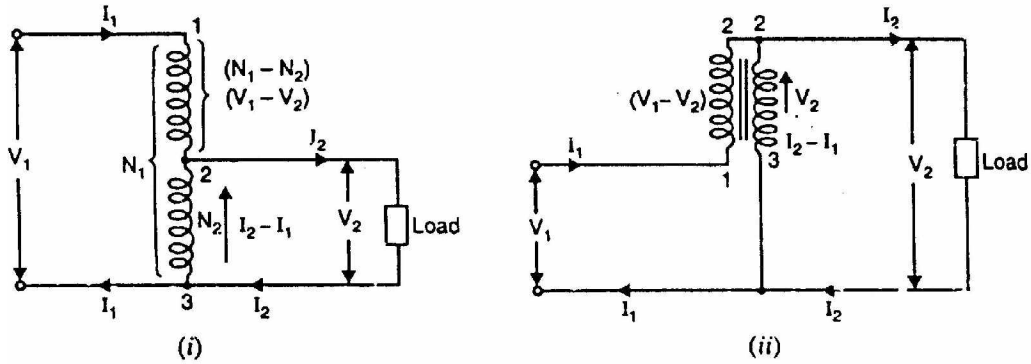

Fig.(7.38)

Fig. (7.38 (ii)) shows the equivalent circuit of the autotransformer. From this equivalent circuit, we have,

$$\frac{V_2}{V_1 - V_2} = \frac{N_2}{N_1 - N_2}$$

$$V_2(N_1 - N_2) = N_2(V_1 - V_2)$$

or $$V_2N_1 - V_2N_2 = N_2V_1 - N_2V_2$$

or $$V_2N_1 = N_2V_1$$

$$\therefore \quad \frac{V_2}{V_1} = \frac{N_2}{N_1} = K \qquad \text{(i)}$$

Also $$(V_1 - V_2)I_1 = (I_2 - I$$

or $$V_1I_1 - V_2I_1 = V_2I_2 -$$

or $$V_1I_1 = V_2I_2$$

$$\therefore \quad \frac{V_2}{V_1} = \frac{I_1}{I_2}$$

(
i

From eqs. (i) and (ii),

$$\frac{V_2}{V_1} = \frac{N_2}{N_1} = \frac{I_1}{I_2} = K$$

Also $V_1I_1 = V_2I_2$ (Input apparent power = Output apparent power)

Output

Since the primary and secondary windings of an autotransformer are connected magnetically as well as electrically, the power from primary is transferred to the secondary inductively (transformer action) as well as conductively (i.e., conducted directly from source to the load).

Output apparent power = V_2I_2

Apparent power transferred inductively = $V_2(I_2 - I_1) = V_2(I_2 - K\,I_2)$

$= V_2I_2(1 - K) = V_1I_1(1 - K)$

$\therefore$ Power transferred inductively = Input $\times$ (1 – K)

$\therefore$ Power transferred conductively = Input – Input (1 – K)

= Input [1 – (1 – K)]

= K $\times$ Input

Suppose the input power to an ideal autotransformer is 1000 W and its voltage transformation ratio K= 1/4. Then,

Power transferred inductively = Input $\times (1-K) = 1000\left(1-\frac{1}{4}\right) = 750$ W

Power transferred conductively = K $\times$ Input = $\frac{1}{4} \times 1000 = 250$ W

Note that input power to the autotransformer is 1000 W. Out of this, 750 W is transferred to the secondary by transformer action (inductively) while 250 W is conducted directly from the source to the load (i.e., it is transferred conductively to the load).

7.35 Saving of Copper in Autotransformer

For the same output and voltage transformation ratio $K(N_2/N_1)$, an autotransformer requires less copper than an ordinary 2-winding transformer. Fig. (7.39 (i)) shows an ordinary 2-winding transformer whereas Fig. (7.39 (ii)) shows an autotransformer having the same output and voltage transformation ratio K.

The length of copper required in a winding is proportional to the number of turns and the area of cross-section of the winding wire is proportional to the current rating. Therefore, the volume and hence weight of copper required in a winding is proportional to current x turns i.e.,

Weight of Cu required in a winding $\propto$ current $\times$ turns

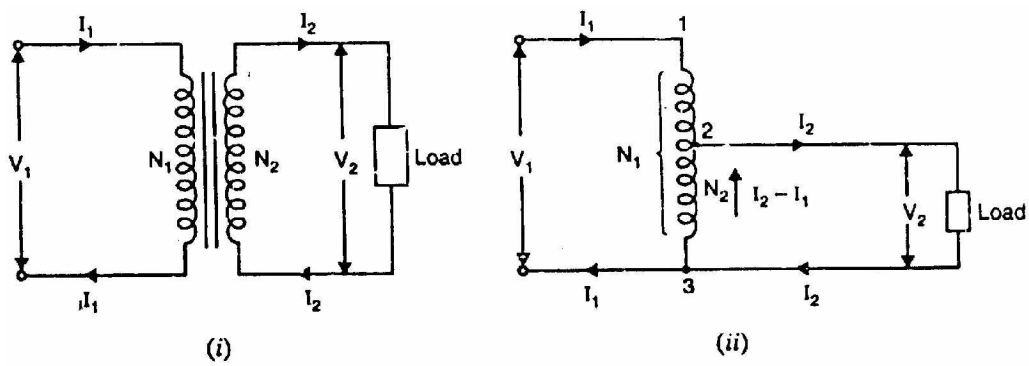

Fig.(7.39)

Winding transformer

Weight of Cu required $\propto (I_1N_1 + I_2N_2)$

Autotransformer

Weight of Cu required in section 1-2 $\propto I_1(N_1 - N_2)$

Weight of Cu required in section 2-3 $\propto (I_2 - I_1)N_2$

$\therefore$ Total weight of Cu required $\propto I_1\,(N_1 - N_2) + (I_2 - I_1)N_2$

$$\frac{\text{Weight of Cu in autotransformer}}{\text{Weight of Cu in ordinary transformer}} = \frac{I_1(N_1 - N_2) + (I_2 - I_1)N_2}{I_1N_1 + I_2N_2}$$

$$= \frac{N_1I_1 - N_2I_1 + N_2I_2 - N_2I_1}{N_1I_1 + N_2I_2}$$

$$= \frac{N_1I_1 + N_2I_2 - 2N_2I_1}{N_1I_1 + N_2I_2}$$

$$= 1 - \frac{2N_2I_1}{N_1I_1 + N_2I_2}$$

$$= 1 - \frac{2N_2I_1}{2N_1I_1} \qquad (\text{n} \;\; N_2I_2 = N_1I_1)$$

$$= 1 - \frac{N_2}{N_1} = 1 - K$$

$\therefore$ Wt. of Cu in autotransformer (W_a)

$= (1 - K) \times$ Wt. in ordinary transformer (W_o)

or $\quad W_a = (1 - K) \times W_o$

$\therefore \quad$ Saving in Cu $= W_o - W_a = W_a - (1 - K)W_o = K\,W_o$

or $\quad$ Saving in Cu $= K \times$ Wt. ofCu in ordinary transformer

Thus if K = 0.1, the saving of Cu is only 10% but if K = 0.9, saving of Cu is 90%. Therefore, the nearer the value of K of autotransformer is to 1, the greater is the saving of Cu.

7.36 Advantages and Disadvantages of autotransformers

Advantages

(i) An autotransformer requires less Cu than a two-winding transformer of similar rating.

(ii) An autotransformer operates at a higher efficiency than a two-winding transformer of similar rating.

(iii) An autotransformer has better voltage regulation than a two-winding transformer of the same rating.

(iv) An autotransformer has smaller size than a two-winding transformer of the same rating.

(v) An autotransformer requires smaller exciting current than a two-winding transformer of the same rating.

It may be noted that these advantages of the autotransformer decrease as the ratio of transformation increases. Therefore, an autotransformer has marked

advantages only for relatively low values of transformation ratio (i.e. values approaching 1).

Disadvantages

(i) There is a direct connection between the primary and secondary. Therefore, the output is no longer d.c. isolated from the input.

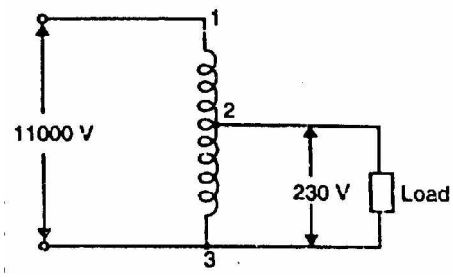

Fig.(7-40)

(ii) An autotransformer is not safe for stepping down a high voltage to a low voltage. As an illustration, Fig. (7.40) shows 11000/230 V step-down autotransformer. If an open circuit develops in the common portion 2-3 of the winding, then full-primary voltage (i.e., 11000 V in this case) will appear across the load. In such a case, any one coming in contact with the secondary is subjected to high voltage. This could be dangerous to both the persons and equipment. For this reason, autotransformers are prohibited for general use.

(iii) The short-circuit current is much larger than for the two-winding transformer of the same rating. It can be seen from Fig. (7.40) that a short-circuited secondary causes part of the primary also to be short-circuited. This reduces the effective resistance and reactance.

7.37 Applications of Autotransformers

(i) Autotransformers are used to compensate for voltage drops in transmission and distribution lines. When used for this purpose, they are known as booster transformers.

(ii) Autotransformers are used for reducing the voltage supplied to a.c. motors during the starting period.

(iii) Autotransformers are used for continuously variable supply.

7.38 Conversion of Two-Winding Transformer Into Autotransformer

A two-winding transformer can be converted into an autotransformer, either step-up or step-down. Consider a 10 kVA, 2300/230 V two-winding transformer shown in Fig. (7.41 (i)). If we want to convert it into autotransformer, the two windings of the transformer are connected in series. If we use the additive polarity as shown in Fig. (7.41 (ii)), we get step-up autotransformer. The voltage rating of the autotransformer is now 2300/2530 V. If we use subtractive polarity as shown in Fig. (7.41 (iii)), we get a step-down autotransformer. The voltage rating of the transformer is now 2300/2070 V.

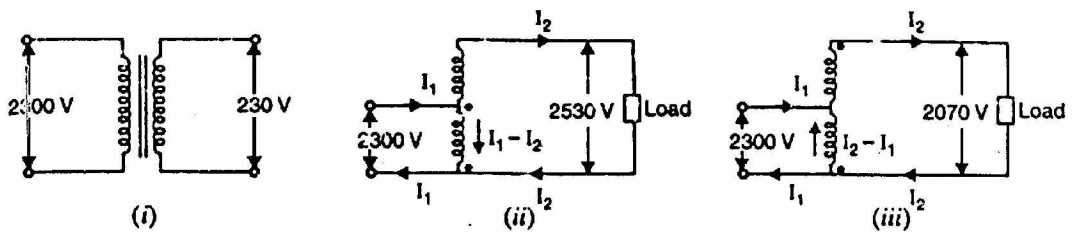

Fig.(7.41)

When a two-winding transformer is converted into autotransformer, the kVA rating of the resulting autotransformer is greatly increased. This higher rating results from the conduction connection.

7.39 Parallel Operation of Single-Phase Transformers

Two transformers are said to be connected in parallel if the primary windings are connected to supply busbars and secondary windings are connected to load busbars. Fig. (7.42) shows two transformers A and B in parallel. While connecting two or more than two transformers in parallel, it is essential that their terminals of similar polarities are joined to the same busbars as shown in Fig. (7.42). The wrong connections may result in a dead short-circuit and primary transformers may be damaged unless protected by fuses or circuit breakers. There are three principal reasons for connecting transformers in parallel. Firstly, if one transformer fails, the continuity of supply can be maintained through other transformers. Secondly, when the load on the sub-station becomes more than the capacity of the existing transformers, another transformer can be added in parallel. Thirdly, any transformer can be taken out of the circuit for repair/routine maintenance without interrupting supply to the consumers.

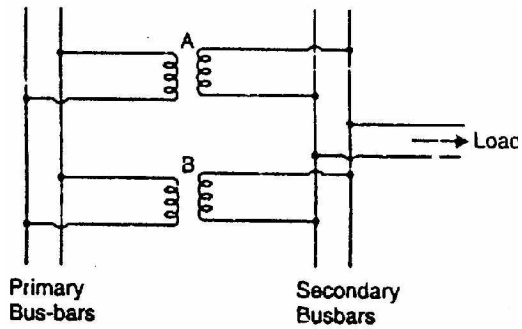

Fig.(7.42)

Conditions for satisfactory parallel operation

In order that the transformers work satisfactorily in parallel, the following conditions should be satisfied:

(i) Transformers should be properly connected with regard to their polarities.

(ii) The voltage ratings and voltage ratios of the transformers should be the same.

(iii) The per unit or percentage impedances of the transformers should be equal.

(iv) The reactance/resistance ratios of the transformers should be the same.

Condition (i)

Condition (i) is absolutely essential because wrong connections may result in dead short-circuit. Fig. (7.43 (i)) shows the correct method of connecting two single-phase transformers in parallel. It will be seen that round the loop formed by the secondaries, the two secondary e.m.f.s E_A and E_B oppose and there will be no circulating current.

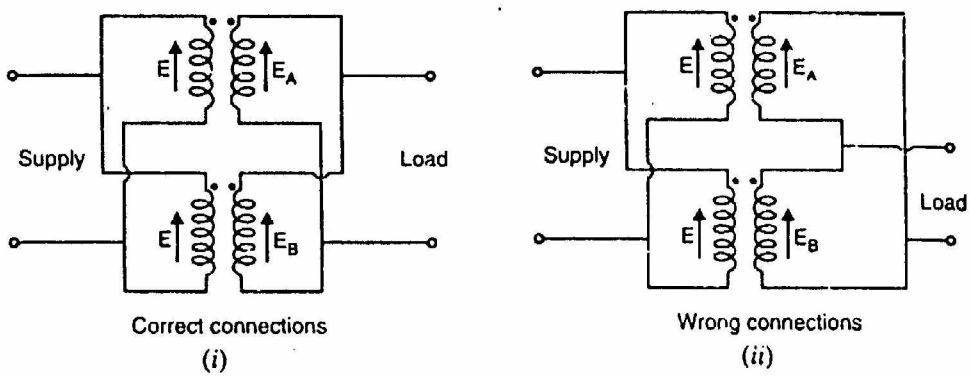

Fig.(7.43)

Fig. (7.43 (ii)) shows the wrong method of connecting two single-phase transformers is parallel. Here the two secondaries are so connected that their e.m.f.s E_A and E_B are additive. This may lead to short-circuit conditions and a very large circulating current will flow in the loop formed by the two secondaries. Such a condition may damage the transformers unless they are protected by fuses and circuit breakers.

Condition (ii)

This condition is desirable for the satisfactory parallel operation of transformers. If this condition is not met, the secondary e.m.f.s will not be equal and there will be circulating current in the loop formed by the secondaries. This will result in the unsatisfactory parallel operation of transformers. Let us illustrate this point. Consider two single-phase transformer A and B operating in parallel as shown in Fig. (7.44). Let E_A and E_B be their no-load secondary voltages and Z_A and Z_B be their impedances referred to the secondary. Then at no-load, the circulating current in the loop formed by the secondaries is

$$\text{Circulating current, } I_C = \frac{E_A - E_B}{Z_A + Z_B} \qquad \text{assuming } E_A > E_B$$

Even a small difference in the induced secondary voltages can cause a large circulating current in the secondary loop because impedances of the transformers

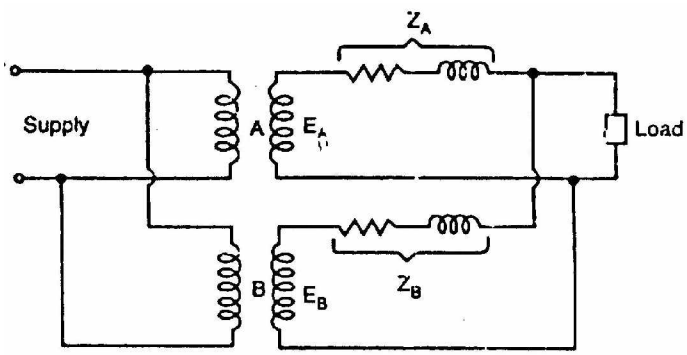

Fig.(7.44)

are small. This secondary circulating current will cause current to be drawn from the supply by the primary of each transformer. These currents will cause copper losses in both primary and secondary. This creates heating with no useful output. When load is connected to the system, this circulating current will tend to produce unequal loading conditions i.e., the transformers will not share the load according to their kVA ratings. It is because the circulating current will tend to make the terminal voltages of the same value for both transformers. Therefore, transformer with smaller voltage ratio will tend to carry more than its proper share of load. Thus, one transformer would tend to become overloaded than the other and the system could not be loaded to the summation of transformer ratings without overloading one transformer.

Condition (iii)

This condition is also desirable for proper parallel operation of transformers. If this condition is not met, the transformers will not share the load according to their kVA ratings. Sometimes this condition is not fulfilled by the design of the transformers. In that case, it can be corrected by inserting proper amount of resistance or reactance or both in series with either primary or secondary circuits of the transformers where the impedance is below the value required to fulfil condition (iii).

Condition (iv)

If the reactance/resistance ratios of the two transformers are not equal, the power factor of the load supplied by the transformers will not be equal. In other words, one transformer will be operating with a higher and the other with a lower power factor than that of the load. Condition (iii) is much more important than condition (iv). Considerable deviation from condition (iv) will result in only a small reduction in the satisfactory degree of operation. When desired, condition (iv) also may be improved by inserting external impedance of proper value.

7.40 Single-Phase Equal Voltage Ratio Transformers in Parallel

Fig. (7.45) shows two single-phase equal voltage ratio transformers A and B in parallel. The secondary e.m.f.s of the two transformers are equal (i.e., $E_A = E_B = E$) because they have the same turns ratio and have their primaries connected to the same supply.

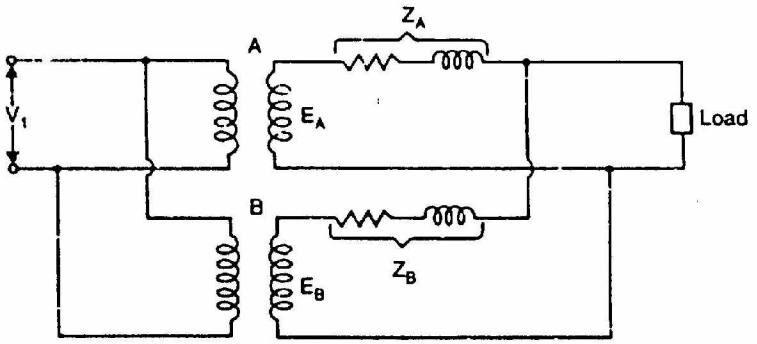

Fig.(7.45)

If the magnetizing current is ignored, the two transformers can be represented by their equivalent circuits referred to secondary as shown in Fig. (7.46). It is clear that the transformers will share total load in the same way as two impedances in parallel.

Let Z_A, Z_B = Impedances of transformers referred to secondary

I_A,I_B = Their respective currents

V_2 = Common terminal voltage

I = Total load current

It is clear from Fig. (7.46) that:

$$I_A + I_B = I \qquad \text{(i)}$$

and $$I_A Z_A = I_B Z_B$$

$$\therefore \quad I_A = I_B \frac{Z_B}{Z_A}$$

$$\therefore \quad I_B \frac{Z_B}{Z_A} + I_B = I$$

or $$I_B\left(1 + \frac{Z_B}{Z_A}\right) = I$$

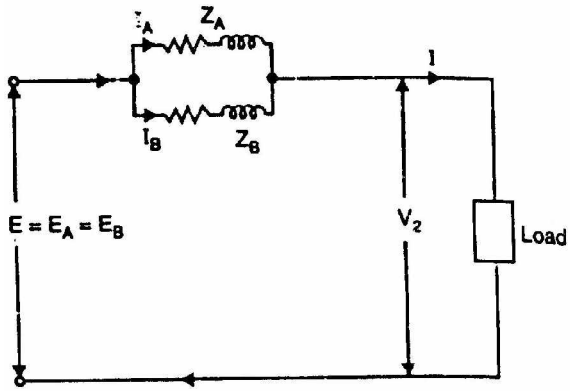

Fig.(7.46)

$$\therefore \quad I_B = I \frac{Z_A}{Z_A + Z}$$

(
i
i
)

Similarly, $I_A = I\dfrac{Z_B}{Z_A + Z_B}$ (iii)

Thus the way in which the load current I is shared by the transformers is independent of load impedance and depends only on the transformer impedances.

kVA carried by each transformer

Let S = total load kVA = $V_2\, I \times 10^{-3}$

S_A = kVA carried by transformer A

S_B = kVA carried by transformer B

$$\therefore \quad S_A = V_2 I_A \times 10^{-3} = V_2 I \times 10^{-3} \times \frac{Z_B}{Z_A + Z_B} = S\frac{Z_B}{Z_A + Z_B}$$

or $$S_A = S\frac{Z_B}{Z_A + Z_B}$$

Also $$S_B = V_2 I_B \times 10^{-3} = V_2 I \times 10^{-3} \times \frac{Z_A}{Z_A + Z_B} = S\frac{Z_A}{Z_A + Z_B}$$

or $$S_B = S\frac{Z_A}{Z_A + Z_B}$$

Therefore, S_A and S_B are obtained in magnitude as well as m phase from the above expressions. It may be noted that in these expressions, Z_A and Z_B can be expressed in ohms or in p.u. If p.u. values are to be used, they should be with respect to common base kVA.

7.41 Single- Phase Unequal Voltage Ratio Transformers in Parallel

Fig. (7.47) shows two single-phase unequal voltage ratio transformers A and B in parallel. Since the voltage ratios of the transformers are unequal, their no-load secondary voltages will also be unequal. We shall calculate how load current is shared between the two transformers.

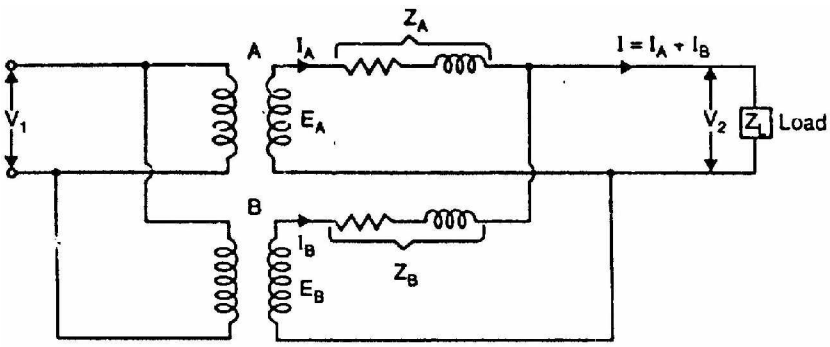

Fig.(7.47)

Fig. (7.48) shows the equivalent circuit of the transformers referred to secondary in a simplified way.

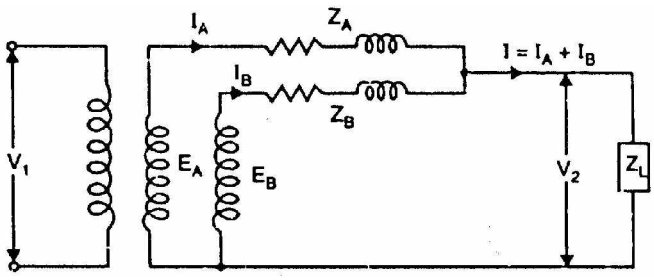

Fig.(7.48)

Let E_A, E_B = no-load secondary voltages of the two transformers. It is assumed that $E_A > E_B$.

I_A, I_B = their respective currents

I = load current

Z_A, Z_B = impedances of the transformers referred to secondary

Z_B = load impedance

V_2 = load voltage

At no-load, the circulating current I_C is

$$I_C = \frac{E_A - E_B}{Z_A + Z_B}$$

When the system is loaded, the load current I is shared by the two transformers. By kirchhof's oitage law,

$$E_A = V_2 + I_A Z_A$$

and $$E_B = V_2 + I_B Z_B$$

But $$V_2 = I\,Z_L = (I_A + I_B)Z_L$$

$$\therefore \quad E_A = (I_A + I_B)Z_L + I_A Z_A \qquad \text{(i)}$$

and $$E_B = (I_A + I_B)Z_L + I_B Z_B \qquad \text{(ii)}$$

Now $$E_A - E_B = I_A Z_A - I_B Z_B$$

or $$I_A = \frac{(E_A - E_B) + I_B Z_B}{Z_A}$$

Putting this value of I_A in eq. (ii), we get,

$$E_B = \left[\frac{(E_A - E_B) + I_B Z_B}{Z_A} + I_B\right] Z_L + I_B Z_B$$

On solving, $$I_B = \frac{E_B Z_A - (E_A - E_B)Z_L}{Z_A Z_B + Z_L(Z_A + Z_B)} \qquad \text{(iii)}$$

From the symmetry of the expression, we get,

$$I_A = \frac{E_A Z_B + (E_A - E_B)Z_L}{Z_A Z_B + Z_L(Z_A + Z_B)}$$

Also $$I = I_A + I_B = \frac{E_A Z_B + E_B Z_A}{Z_A Z_B + Z_L(Z_A + Z_B)}$$

$$V_2 = I\,Z_L = \left[\frac{E_A Z_B + E_B Z_A}{Z_A Z_B + Z_L(Z_A + Z_B)}\right] Z_L$$

or $$V_2 = \frac{E_A Z_B + E_B Z_A}{\dfrac{Z_A Z_B}{Z_L} + Z_A + Z_B}$$

Since the transformers have a common primary voltage, E_A and E_B will be in phase with each other.

7.42 Three-Phase Transformer

A three-phase system in used to generate and transmit electric power. Three-phase voltages are raised or lowered by means of three-phase transformers. A three-phase transformer can be built in two ways viz., (i) by suitably connecting a bank of three single-phase transformers or (ii) by constructing a three-phase

transformer on a common magnetic structure. In either case, the windings may be connected in Y – Y, Δ – Δ, Y – Δ or Δ – Y.

(i) Bank of three single-phase transformers

Three similar single-phase transformers can be connected to form a three-phase transformer. The primary and secondary windings may be connected in star (Y) or delta (Δ) arrangement. Fig. (7.49 (i)) shows a Y - Δ connection of a three-phase transformer. The primary windings are connected in star and the secondary windings are connected in delta. A more convenient way of showing this connection is illustrated in Fig. (7-49 (ii)). The primary and secondary windings shown parallel to each other belong to the same single-phase transformer. The ratio of secondary phase voltage to primary phase voltage is the phase transformation ratio K.

$$\text{Phase transformation ratio, } K = \frac{\text{Secondary phase voltage}}{\text{Primary phase voltage}} = \frac{N_2}{N_1}$$

Referring to Fig. (7.49 (ii)), primary line-to-line voltage is V and the primary line current is I. The phase transformation ratio is K (= N_2/N_1). The secondary line voltage and line current are also shown.

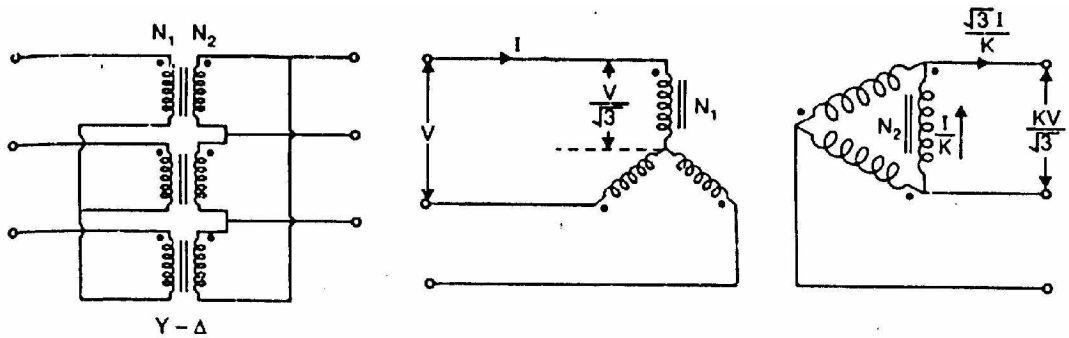

Fig.(7.49)

(ii) Three-phase transformer

A three-phase transformer can be constructed by having three primary and three secondary windings on a common magnetic circuit. The basic principle of a 3-phase transformer is illustrated in Fig. (7.50 (i)). The three single-phase core-type transformers, each with windings (primary and secondary) on only one leg have their unwound legs combined to provide a path for the returning flux. The primaries as well as secondaries may be connected in star or delta. If the primary is energized from a 3-phase supply, the central limb (i.e., unwound limb) carries the fluxes produced by the 3-phase primary windings. Since the phasor sum of three primary currents at any instant is zero, the sum of three fluxes passing through the central limb must be zero. Hence no flux exists in the central limb

and it may, therefore, be eliminated. This modification gives a three leg core-type 3-phase transformer. In this case, any two legs will act as a return path for the flux in the third leg. For example, if flux is ϕ in one leg at some instant, then flux is $\phi/2$ in the opposite direction through the other two legs at the same instant. All the connections of a 3-phase transformer are made inside the case and for delta-connected winding three leads are brought out while for star-connected winding four leads are brought out.

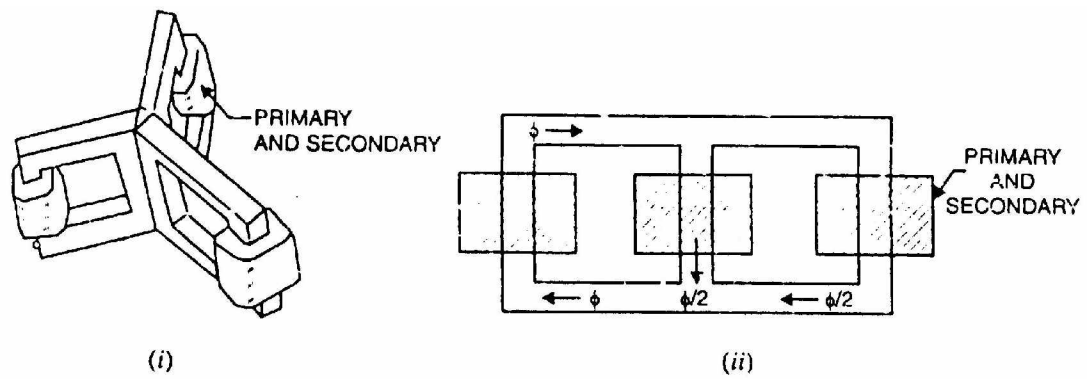

Fig.(7.50)

For the same capacity, a 3-phase transformer weighs less, occupies less space and costs about 20% less than a bank of three single-phase transformers. Because of these advantages, 3-phase transformers are in common use, especially for large power transformations.

A disadvantage of the three-phase transformer lies in the fact that when one phase becomes defective, the entire three-phase unit must be removed from service. When one transformer in a bank of three single-phase transformers becomes defective, it may be removed from service and the other two transformers may be reconnected to supply service on an emergency basis until repairs can be made.

7.43 Three-Phase Transformer Connections

A three-phase transformer can be built by suitably connecting a bank of three single-phase transformers or by one three-phase transformer. The primary or secondary windings may be connected in either star (Y) or delta (Δ) arrangement. The four most common connections are (i) Y-Y (ii) Δ-Δ (iii) Y-Δ and (iv) Δ-Y. These four connections are shown in Fig. (7.51). In this figure, the windings at the left are the primaries and those at the right are the secondaries. The primary and secondary voltages and currents are also shown. The primary line voltage is V and the primary line current is I. The phase transformation ratio K is given by;

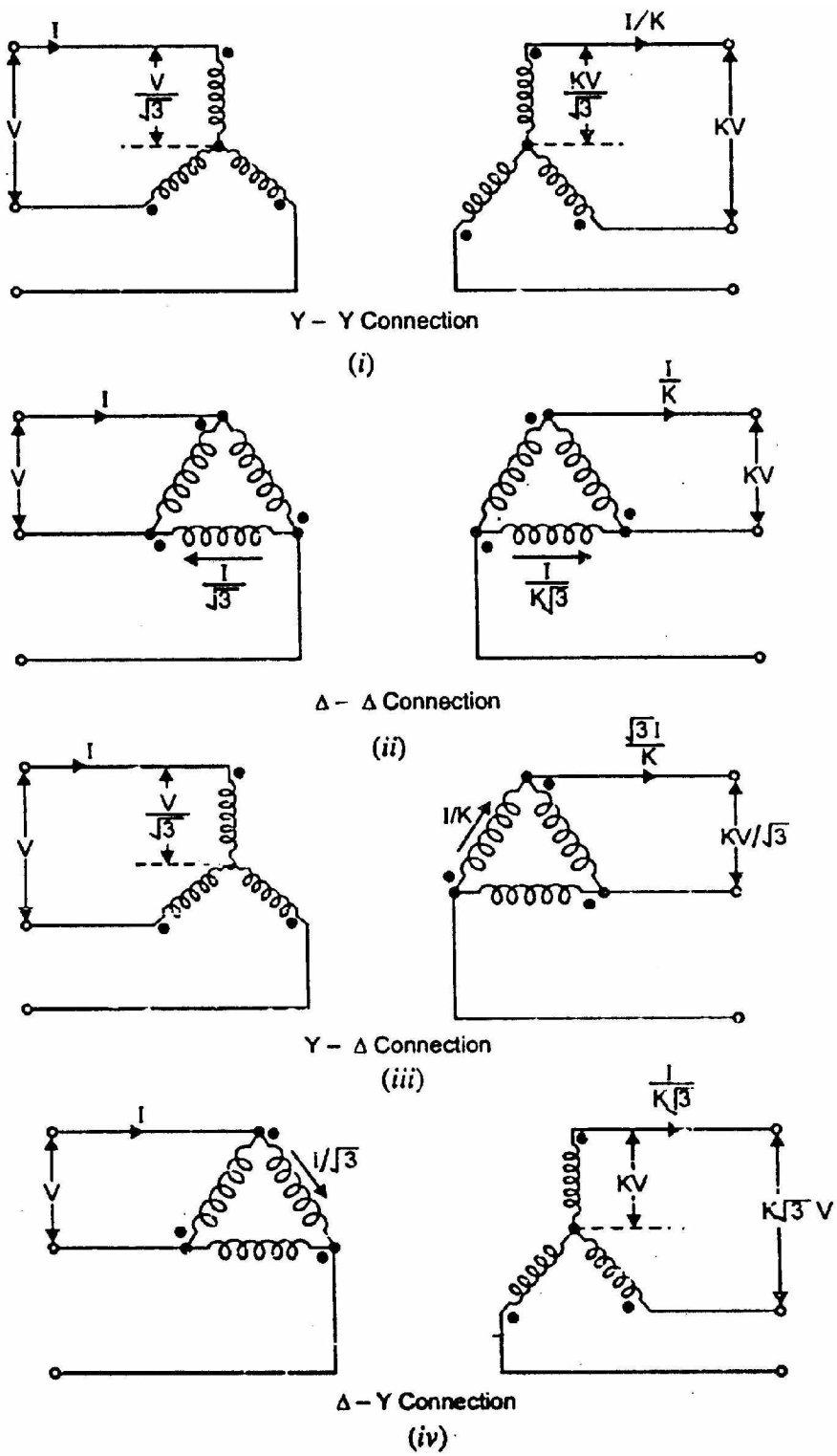

Fig.(7.51)

$$K = \frac{\text{Secondary phase voltage}}{\text{Primary phase voltage}} = \frac{N_2}{N_1}$$

(i) **Y-Y Connection**. In the Y-Y connection shown in Fig. (7.51 (i)), 57.7% (or $1/\sqrt{3}$) of the line voltage is impressed upon each winding but full line

current flows in each winding. Power circuits supplied from a Y-Y bank often create serious disturbances in communication circuits in their immediate vicinity. Because of this and other disadvantages, the Y-Y connection is seldom used.

(ii) **Δ-Δ Connection**. The Δ-Δ connection shown in Fig. (7.51 (ii)) is often used for moderate voltages. An advantage of this connection is that if one transformer gets damaged or is removed from service, the remaining two can be operated in what is known as the open-delta or V-V connection. By being operated in this way, the bank still delivers three-phase currents and voltages in their correct phase relationships but the capacity of the bank is reduced to 57.7% of what it was with all three transformers in service.

(iii) **Y-Δ Connection**. The Y-Δ connection shown in Fig. (7.51(iii)) is suitable for stepping down a high voltage. In this case, the primaries are designed for 57.7% of the high-tension line voltages.

(iv) **Δ-Y Connection**. The Δ-Y connection shown in Fig. (7.51 (iv)) is commonly used for stepping up to a high voltage.

7.44 Three-Phase Transformation with Two Single-Phase Transformers

It is possible to transform three-phase power by using two single-phase transformers. Two methods of doing this are:

(i) the connection of two identical single-phase transformers in open delta (or V-V connection).

(ii) the T-T connection (or Scott connection) of two nonidehtical single-phase transformers.

Both of these methods of three-phase transformation result in slightly unbalanced output voltages under load because of unsymmetrical relations. The unbalance is negligible under usual conditions of operation.

7.45 Open-Delta or V-V Connection

If one transformer breaks down in a star-star connected system of 3 single-phase transformers, three-phase power cannot be supplied until the defective transformer has been replaced or repaired. To eliminate this undesirable condition, single-phase transformers are generally connected in Δ-Δ. In this case, if one transformer breaks down, it is possible to continue supplying three-phase power with the other two transformers because this arrangement maintains correct voltage and phase relations on the secondary. However, with two

transformers, the capacity of the bank is reduced to 57.7% of what it was with all three transformers in service (i.e., complete Δ-Δ circuit).

Theory

If one transformer is removed in the Δ-Δ connection of three single-phase transformers, the resulting connection becomes open delta or V-V connection. In complete Δ-Δ connection, the voltage of any one phase is equal and opposite to the sum of the voltages of the other two phases. Therefore, under no-load conditions if one transformer is removed, the other two will maintain the same three line voltages on the secondary side. Under load conditions, the secondary line voltages will be slightly unbalanced because of the unsymmetrical relation of the impedance drops in the transformers.

Fig. (7.52 (i)) shows open delta (or V-V) connection; one transformer shown dotted is removed. For simplicity, the load is considered to be star connected. Fig. (7.52 (ii)) shows the phasor diagram for voltages and currents. Here V_{AB}, V_{BC} and V_{CA} represent the line-to-line voltages of the primary; V_{ab}, V_{bc} and V_{ca} represent line-to-line voltages of the secondary and V_{an}, V_{bn} and V_{cn} represent the phase voltages of the load. For inductive load, the load currents I_a, I_b and I_c will lag the corresponding voltages V_{an}, V_{bn} and V_{cn} by the load phase angle ϕ.

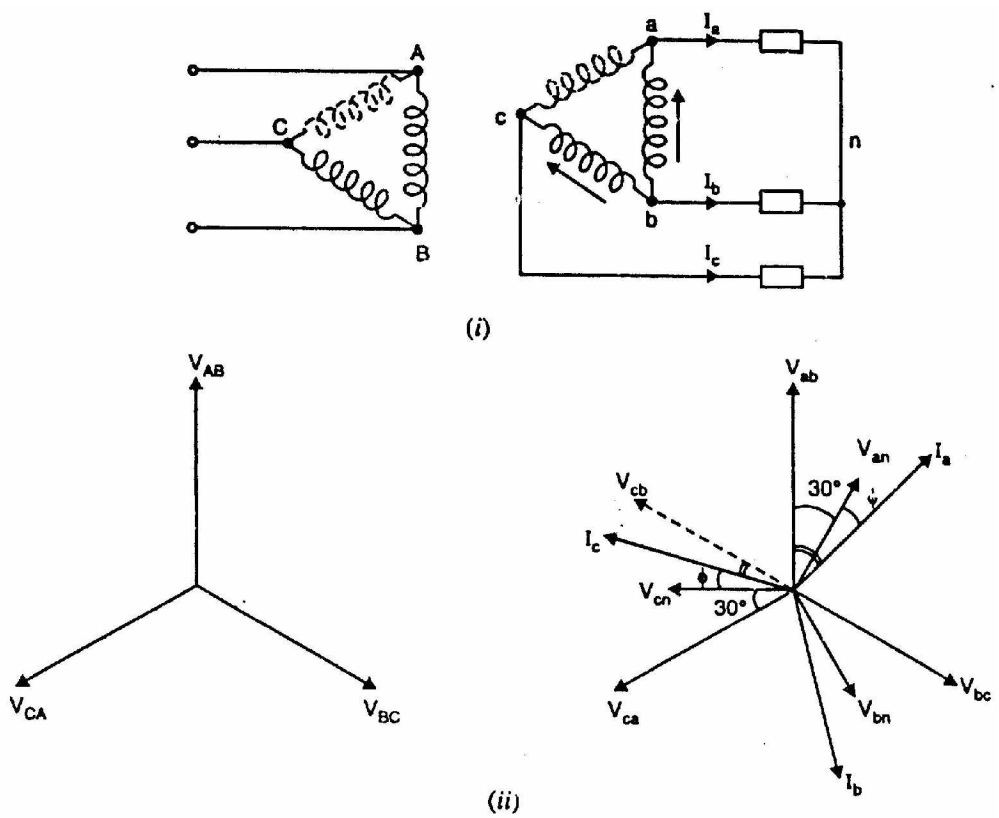

Fig.(7.52)

The transformer windings ab and bc will deliver power given by;

$P_{ab} = V_{ab} I_a \cos(30° + \phi)$

$P_{bc} = V_{cb} I_c \cos(30° - \phi)$

Let $V_{ab} = V_{cb} = V$, the voltage rating of transformer secondary winding

$I_a = I_c = I$, current rating of the transformer secondary winding

p.f. = 1 i.e. $\phi = 0°$ ... For resistive load

$\therefore$ Power delivered to the resistive load by V-V connection is

$$P_V = P_{ab} + P_{bc} = vIU \cos 30° + VI \cos 30° = 2VI \cos 30°$$

With all the three transformers connected in delta, the power delivered to the resistive load is

$$P_\Delta = 3VI$$

$$\therefore \quad \frac{P_V}{P_\Delta} = \frac{2VI \cos 30°}{3VI} = \frac{2 \cos 30°}{3} = 0.577$$

Hence the power-handling capacity of a V-V circuit (without overheating the transformers) is 57.7% of the capacity of a complete Δ-Δ circuit of the same transformers.

In a V-V circuit, only 86.6% of the rated capacity of the two transformers is available. This can be readily proved.

$$\frac{\text{Operating capacity}}{\text{Available capacity}} = \frac{2VI \cos 30°}{2VI} = \cos 30° = \frac{\sqrt{3}}{2} = 0.866$$

Let us illustrate V-V connection with a numerical example. Suppose three identical single-phase transformers, each of capacity 10 kVA, are connected in Δ-Δ. The total rating of the three transformers is 30 kVA. When one transformer is removed, the system reverts to V-V circuit and can deliver 3-phase power to a 3-phase load. However, the kVA capacity of the V-V circuit is reduced to 30 × 0.577 = 17.3 kVA and not 20 kVA as might be expected. This reduced capacity can be determined in an alternate way. The available capacity of the two transformers is 20 kVA. When operating in V-V circuit, only 86.6% of the rated capacity is available i.e. 20 × 0.866 = 17.3 kVA.

7.46 Power Factor of Transformers in V-V Circuit

When V-V circuit is delivering 3-phase power, the power factor of the two transformers is not the same (except at unity p.f.). Therefore, the voltage regulation of the two transformers will not be the same. If the load power factor angle is ϕ, then,

p.f. of transformer 1 = cos (30° − ϕ)
p.f. of transformer 2 = cos (30° + ϕ)

(i) When load p.f. = 1 i.e. ϕ = 0°
In this case, each transformer will have a power factor of 0.866.

(ii) When load p.f. = 0.866 i.e. ϕ = 30°
In this case, one transformer will have a p.f. of cos (30° − 30°) = 1 and the other of cos (30° + 30°) = 0.5.

(iii) When load p.f = 0.5 i.e. ϕ = 60°
In this case, one transformer will have a p.f. of cos (30° − 60°) = 0.866 and the other of cos (30° + 60°) = 0. Thus at a load p.f. of 0.5, one transformer delivers all the power at 0.866 p.f. and the other (although still necessary to be in the circuit) delivers no power at all.

7.47 Applications of Open Delta or V-V Connection

The V-V circuit has a number of features that arc advantageous. A few applications are given below by way of illustration:

(i) The circuit can be employed in an emergency situation when one transformer in a complete Δ-Δ circuit must be removed for repair and continuity of service is required.

(ii) Upon failure of the primary or secondary of one transformer of a complete Δ-Δ circuit, the system can be operated as V-V circuit and can deliver 3-phase power (with reduced capacity) to a 3-phase load.

(iii) A circuit is sometimes installed as V-V circuit with the understanding that its capacity may be increased by adding one more transformer to form complete Δ-Δ circuit. As shown earlier,

$$\frac{P_V}{P_\Delta} = \frac{1}{\sqrt{3}} = 0.577$$

$$\therefore \quad P_\Delta = \sqrt{3} \times P_V$$

Thus if a V-V circuit is changed to complete Δ-Δ circuit, the capacity is increased by a factor of $\sqrt{3} = (=1.732)$.

7.48 Scott Connection or T-T Connection

Although there are now no 2-phase transmission and distribution systems, a 2-phase supply is sometimes required. We can convert 3-phase supply into 2-phase supply through scott or T-T connection of two single-phase transformers. One is called the main transformer M which has a centre-tapped primary; the

centre-tap being C [See Fig. (7.53 (i))]. The primary of this transformer has N_1 turns and is connected between the terminals B and Y of the 3-phase supply. The other transformer is called teaser transformer T and its primary has 0.866 N_1 turns. One end of this primary is connected to centre-tap C and the other end to the terminal R of the 3-phase supply. The number of turns (N_2) of the secondary windings of the two transformers are equal. As we shall see, the voltages across the secondaries are equal in magnitude having a phase difference of 90°. Thus scott connection of two single-phase transformers enables us to convert 3-phase supply to 2-phase supply.

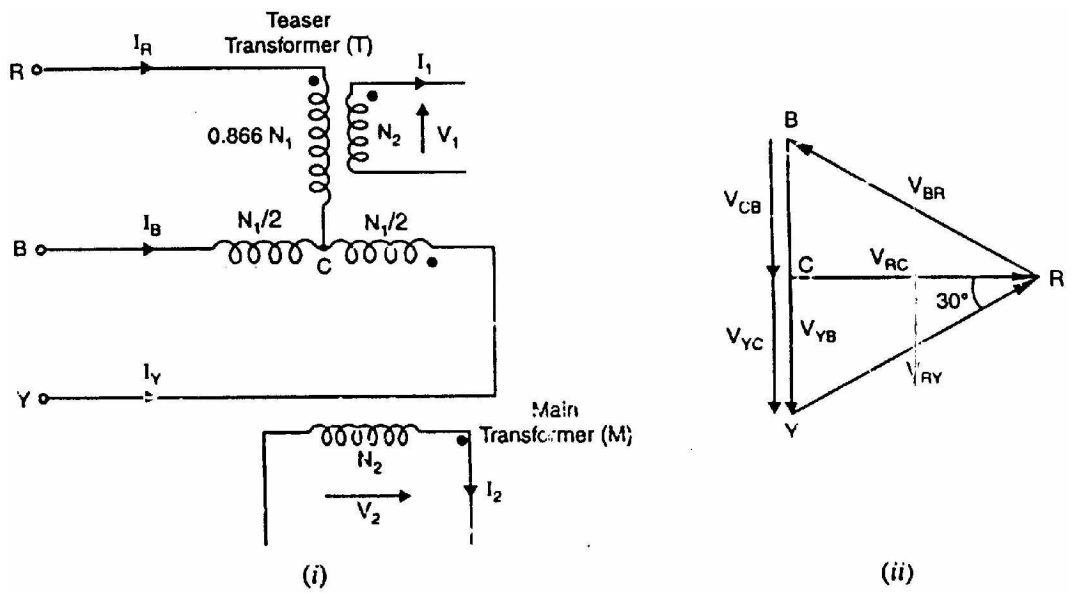

Fig.(7.53)

Theory

Referring to Fig. (7.53 (i)), the centre-tapped primary of the main transformer has line voltage V_{YB} applied to its terminals. The secondary terminal voltage V_2 of the main transformer is

$$V_2 = \frac{N_2}{N_1} V_{YB} = \frac{N_2}{N_1} V_L \qquad (V_L = \text{line voltage})$$

Fig. (7.53 (ii)) shows the relevant phasor diagram. The line voltages of the 3-phase system V_{RY}, V_{YB} and V_{BR} are balanced and are shown on the phasor diagram as a closed equilateral triangle. The voltages across the two halves of the centre tapped primary of the main transformer, V_{CB} and V_{YC} are equal and in phase with V_{YB}. Clearly, V_{RC} leads V_{YB} by 90°. This voltage (i.e., V_{RC}) is applied to the primary of the teaser transformer. Therefore, the secondary voltage V_1 of the teaser transformer will lead the

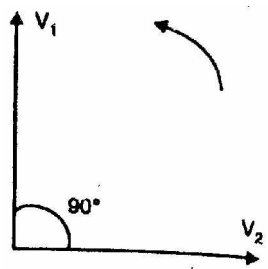

Fig.(7.54)

secondary voltage V_2 by 90° as shown in Fig. (7.54). We now show that magnitudes of V_2 and V_1 are equal,

$$V_{RC} = V_{RY} \cos 30° = \frac{\sqrt{3}}{2} V_L = 0.866\ V_L$$

$$V_1 = \frac{N_2}{0.866\ N_1} V_{RC} = \frac{N_2}{0.866\ N_1} \times 0.866\ V_L = \frac{N_2}{N_1} V_L = V_2$$

Thus voltages V_1 and V_2 constitute balanced 2-phase system consisting of two voltages of equal magnitude having a phase difference of 90°.

7.49 Applications of Transformers

There are four principal applications of transformers viz.

(i) power transformers (ii) distribution transformers
(iii) autotransformers (iv) instrument transformers

(i) **Power Transformers**. They are designed to operate with an almost constant load which is equal to their rating. The maximum efficiency is designed to be at full-load. This means that full-load winding copper losses must be equal to the core losses.

(ii) **Distribution Transformers**. These transformers have variable load which is usually considerably less than the full-load rating. Therefore, these are designed to have their maximum efficiency at between 1/2 and 3/4 of full-load.

(iii) **Autotransformers**. An autotransformer has only one winding and is used in cases where the ratio of transformation (K), either step-up or step down, differs little from 1. For the same output and voltage ratio, an autotransformer requires less copper than an ordinary 2-winding transformer. Autotransformers are used for starting induction motors (reducing applied voltage during starting) and in boosters for raising the voltage of feeders.

(iv) **Instrument transformers**. Current and voltage transformers are used to extend the range of a.c. instruments.

(a) Current transformer

A current transformer is a device that is used to measure high alternating current in a conductor. Fig. (7.55) illustrates the principle of a current transformer. The conductor carrying large current passes through a circular laminated iron core. The conductor constitutes a one-turn primary winding. The secondary winding

consists of a large number of turns of much fine wire wrapped around the core as shown. Due to transformer action, the secondary current is transformed to a low value which can be measured by ordinary meters.

$$\text{Secondary current, } I_S = I_P \times \frac{N_P}{N_S}$$

For example, suppose that I_P = 100 A in Fig. (7.55) and the ammeter is capable of measuring a maximum of 1 A. Then,

$$N_S = N_P \times \frac{I_P}{I_S} = 1 \times \frac{100}{1} = 100$$

(b) Voltage transformer

It is a device that is used to measure high alternating voltage. It is essentially a step-down transformer having small number of secondary turns as shown in Fig. (7.56). The high alternating voltage to be measured is connected directly across the primary. The low voltage winding (secondary winding) is connected to the voltmeter. The power rating of a potential transformer is small (seldom exceeds 300 W) since voltmeter is the only load on the transformer.

$$V_P = V_S \times \frac{N_P}{N_S}$$

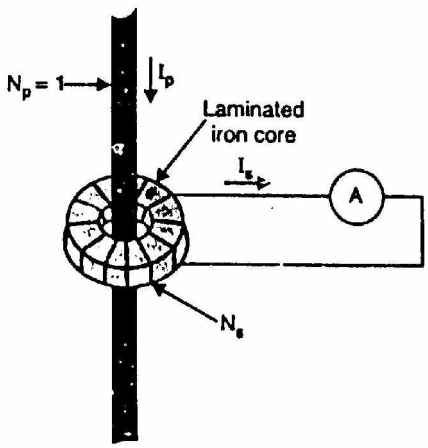

Fig.(7.55)

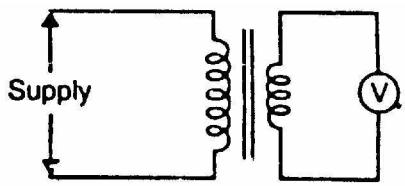

Fig.(7.56)

Chapter (8)

Three Phase Induction Motors

Introduction

The three-phase induction motors are the most widely used electric motors in industry. They run at essentially constant speed from no-load to full-load. However, the speed is frequency dependent and consequently these motors are not easily adapted to speed control. We usually prefer d.c. motors when large speed variations are required. Nevertheless, the 3-phase induction motors are simple, rugged, low-priced, easy to maintain and can be manufactured with characteristics to suit most industrial requirements. In this chapter, we shall focus our attention on the general principles of 3-phase induction motors.

8.1 Three-Phase Induction Motor

Like any electric motor, a 3-phase induction motor has a stator and a rotor. The stator carries a 3-phase winding (called stator winding) while the rotor carries a short-circuited winding (called rotor winding). Only the stator winding is fed from 3-phase supply. The rotor winding derives its voltage and power from the externally energized stator winding through electromagnetic induction and hence the name. The induction motor may be considered to be a transformer with a rotating secondary and it can, therefore, be described as a "transformer-type" a.c. machine in which electrical energy is converted into mechanical energy.

Advantages

(i) It has simple and rugged construction.
(ii) It is relatively cheap.
(iii) It requires little maintenance.
(iv) It has high efficiency and reasonably good power factor.
(v) It has self starting torque.

Disadvantages

(i) It is essentially a constant speed motor and its speed cannot be changed easily.
(ii) Its starting torque is inferior to d.c. shunt motor.

8.2 Construction

A 3-phase induction motor has two main parts (i) stator and (ii) rotor. The rotor is separated from the stator by a small air-gap which ranges from 0.4 mm to 4 mm, depending on the power of the motor.

1. Stator

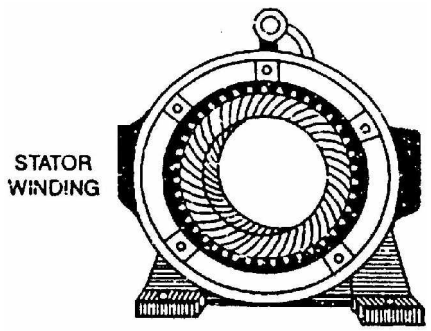

Fig.(8.1)

It consists of a steel frame which encloses a hollow, cylindrical core made up of thin laminations of silicon steel to reduce hysteresis and eddy current losses. A number of evenly spaced slots are provided on the inner periphery of the laminations [See Fig. (8.1)]. The insulated connected to form a balanced 3-phase star or delta connected circuit. The 3-phase stator winding is wound for a definite number of poles as per requirement of speed. Greater the number of poles, lesser is the speed of the motor and vice-versa. When 3-phase supply is given to the stator winding, a rotating magnetic field (See Sec. 8.3) of constant magnitude is produced. This rotating field induces currents in the rotor by electromagnetic induction.

2. Rotor

The rotor, mounted on a shaft, is a hollow laminated core having slots on its outer periphery. The winding placed in these slots (called rotor winding) may be one of the following two types:

(i) Squirrel cage type (ii) Wound type

(i) **Squirrel cage rotor**. It consists of a laminated cylindrical core having parallel slots on its outer periphery. One copper or aluminum bar is placed in each slot. All these bars are joined at each end by metal rings called end rings [See Fig. (8.2)]. This forms a permanently short-circuited winding which is indestructible. The entire construction (bars and end rings) resembles a squirrel cage and hence the name. The rotor is not connected electrically to the supply but has current induced in it by transformer action from the stator.

Those induction motors which employ squirrel cage rotor are called squirrel cage induction motors. Most of 3-phase induction motors use squirrel cage rotor as it has a remarkably simple and robust construction enabling it to operate in the most adverse circumstances. However, it suffers from the disadvantage of a low starting torque. It is because the rotor bars are permanently short-circuited and it is not possible to add any external resistance to the rotor circuit to have a large starting torque.

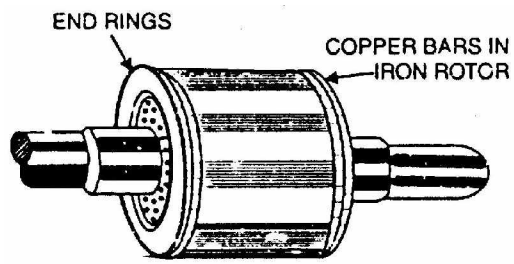

Fig.(8.2)

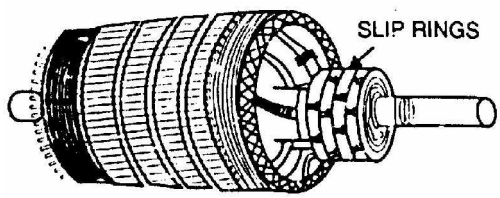

Fig.(8.3)

(ii) **Wound rotor**. It consists of a laminated cylindrical core and carries a 3-phase winding, similar to the one on the stator [See Fig. (8.3)]. The rotor winding is uniformly distributed in the slots and is usually star-connected. The open ends of the rotor winding are brought out and joined to three insulated slip rings mounted on the rotor shaft with one brush resting on each slip ring. The three brushes are connected to a 3-phase star-connected rheostat as shown in Fig. (8.4). At starting, the external resistances are included in the rotor circuit to give a large starting torque. These resistances are gradually reduced to zero as the motor runs up to speed.

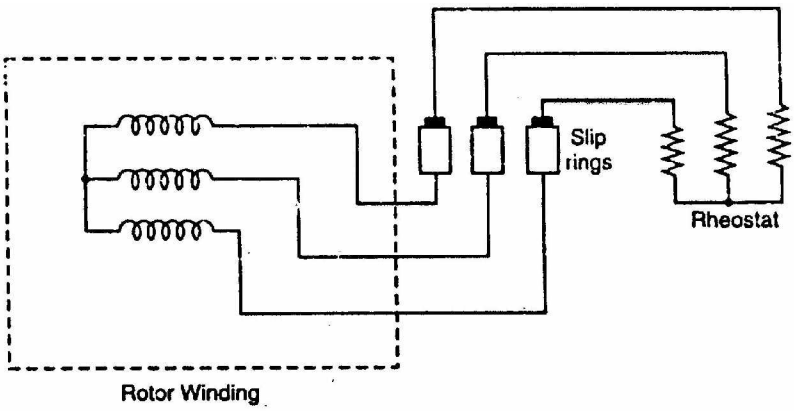

Fig.(8.4)

The external resistances are used during starting period only. When the motor attains normal speed, the three brushes are short-circuited so that the wound rotor runs like a squirrel cage rotor.

8.3 Rotating Magnetic Field Due to 3-Phase Currents

When a 3-phase winding is energized from a 3-phase supply, a rotating magnetic field is produced. This field is such that its poles do no remain in a fixed position on the stator but go on shifting their positions around the stator. For this reason, it is called a rotating Held. It can be shown that magnitude of this rotating field is constant and is equal to 1.5 ϕ_m where ϕ_m is the maximum flux due to any phase.

To see how rotating field is produced, consider a 2-pole, 3i-phase winding as shown in Fig. (8.6 (i)). The three phases X, Y and Z are energized from a 3-phase source and currents in these phases are indicated as I_x, I_y and I_z [See Fig. (8.6 (ii))]. Referring to Fig. (8.6 (ii)), the fluxes produced by these currents are given by:

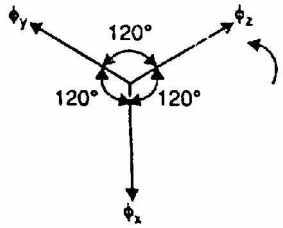

Fig.(8.5)

$$\phi_x = \phi_m \sin \omega t$$

$$\phi_y = \phi_m \sin (\omega t - 120°)$$

$$\phi_z = \phi_m \sin (\omega t - 240°)$$

Here ϕ_m is the maximum flux due to any phase. Fig. (8.5) shows the phasor diagram of the three fluxes. We shall now prove that this 3-phase supply produces a rotating field of constant magnitude equal to 1.5 ϕm.

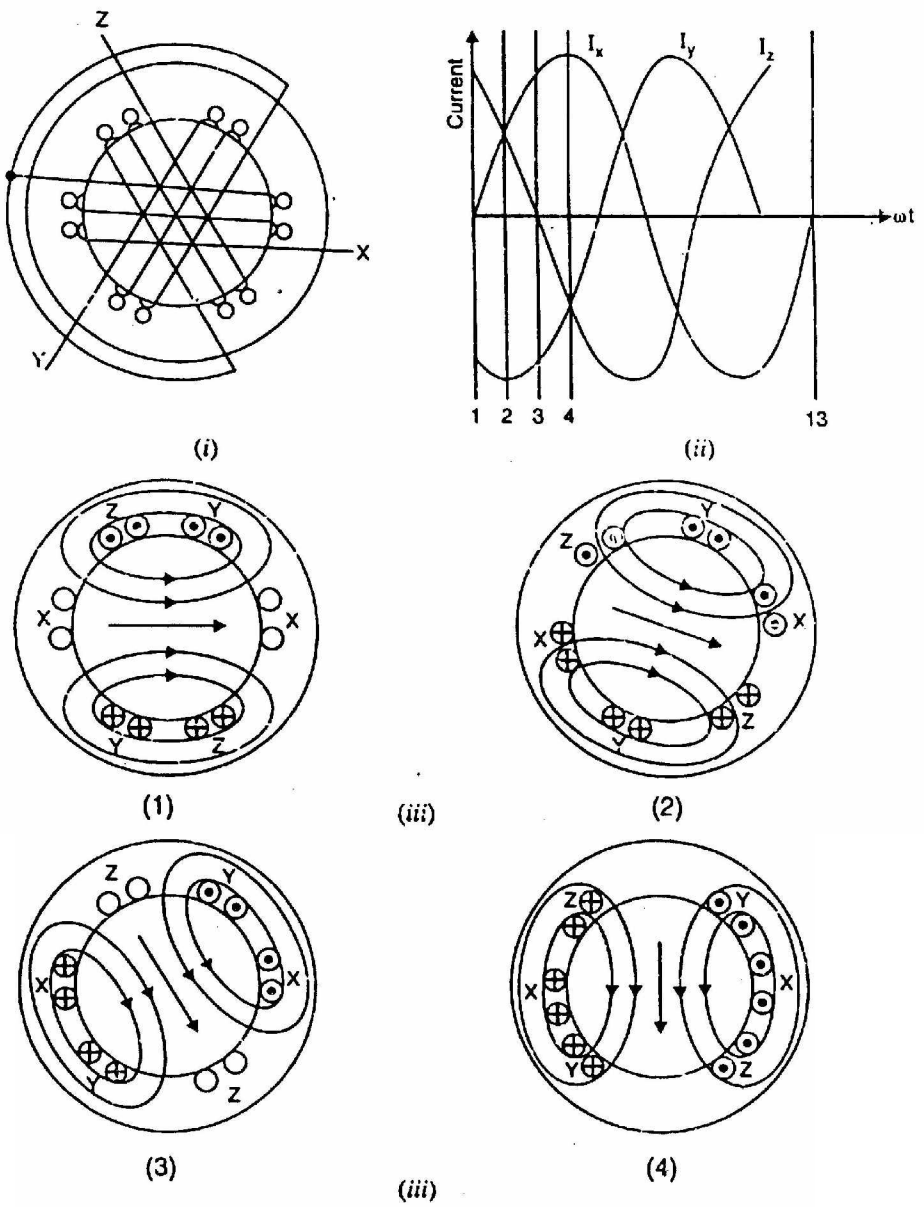

Fig.(8.6)

(i) At instant 1 [See Fig. (8.6 (ii)) and Fig. (8.6 (iii))], the current in phase X is zero and currents in phases Y and Z are equal and opposite. The currents are flowing outward in the top conductors and inward in the bottom conductors. This establishes a resultant flux towards right. The magnitude of the resultant flux is constant and is equal to 1.5 ϕ_m as proved under:

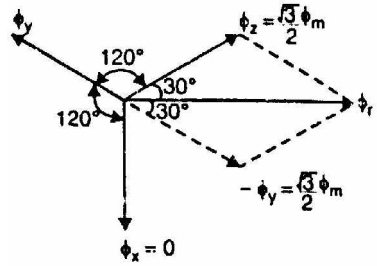

Fig.(8.7)

At instant 1, ωt = 0°. Therefore, the three fluxes are given by;

$$\phi_x = 0; \qquad \phi_y = \phi_m \sin(-120°) = -\frac{\sqrt{3}}{2}\phi_m;$$

$$\phi_z = \phi_m \sin(-240°) = \frac{\sqrt{3}}{2}\phi_m$$

The phasor sum of $-\phi_y$ and ϕ_z is the resultant flux ϕ_r [See Fig. (8.7)]. It is clear that:

$$\text{Resultant flux, } \phi_r = 2 \times \frac{\sqrt{3}}{2}\phi_m \cos\frac{60°}{2} = 2 \times \frac{\sqrt{3}}{2}\phi_m \times \frac{\sqrt{3}}{2} = 1.5\,\phi_m$$

(ii) At instant 2, the current is maximum (negative) in ϕ_y phase Y and 0.5 maximum (positive) in phases X and Y. The magnitude of resultant flux is 1.5 ϕ_m as proved under:

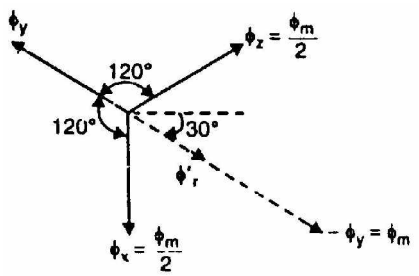

Fig.(8.8)

At instant 2, ωt = 30°. Therefore, the three fluxes are given by;

$$\phi_x = \phi_m \sin 30° = \frac{\phi_m}{2}$$

$$\phi_y = \phi_m \sin(-90°) = -\phi_m$$

$$\phi_z = \phi_m \sin(-210°) = \frac{\phi_m}{2}$$

The phasor sum of ϕ_x, $-\phi_y$ and ϕ_z is the resultant flux ϕ_r

Phasor sum of ϕ_x and ϕ_z, $\phi'_r = 2 \times \frac{\phi_m}{2} \cos\frac{120°}{2} = \frac{\phi_m}{2}$

Phasor sum of ϕ'_r and $-\phi_y$, $\phi_r = \frac{\phi_m}{2} + \phi_m = 1.5\,\phi_m$

Note that resultant flux is displaced 30° clockwise from position 1.

(iii) At instant 3, current in phase Z is zero and the currents in phases X and Y are equal and opposite (currents in phases X and Y arc 0.866 × max. value). The magnitude of resultant flux is 1.5 ϕ_m as proved under:

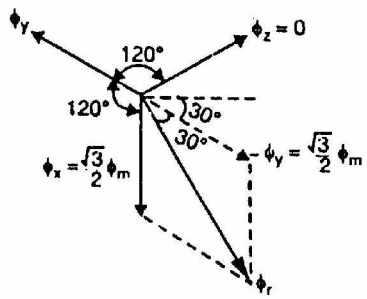

Fig.(8.9)

At instant 3, ωt = 60°. Therefore, the three fluxes are given by;

$$\phi_x = \phi_m \sin 60° = \frac{\sqrt{3}}{2}\phi_m;$$

$$\phi_y = \phi_m \sin(-60°) = -\frac{\sqrt{3}}{2}\phi_m;$$

$$\phi_z = \phi_m \sin(-180°) = 0$$

The resultant flux ϕ_r is the phasor sum of ϕ_x and $-\phi_y$ (**n** $\phi_z = 0$).

$$\phi_r = 2 \times \frac{\sqrt{3}}{2}\phi_m \cos\frac{60°}{2} = 1.5\,\phi_m$$

Note that resultant flux is displaced 60° clockwise from position 1.

(iv) At instant 4, the current in phase X is maximum (positive) and the currents in phases V and Z are equal and negative (currents in phases V and Z are 0.5 × max. value). This establishes a resultant flux downward as shown under:

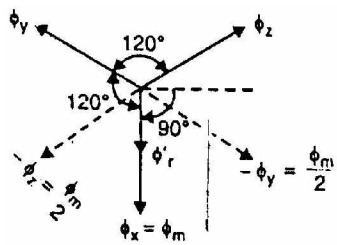

Fig.(7.10)

At instant 4, ωt = 90°. Therefore, the three fluxes are given by;

$$\phi_x = \phi_m \sin 90° = \phi_m$$

$$\phi_y = \phi_m \sin(-30°) = -\frac{\phi_m}{2}$$

$$\phi_z = \phi_m \sin(-150°) = -\frac{\phi_m}{2}$$

The phasor sum of ϕ_x, $-\phi_y$ and $-\phi_z$ is the resultant flux ϕ_r

Phasor sum of $-\phi_z$ and $-\phi_y$, $\phi'_r = 2 \times \frac{\phi_m}{2} \cos\frac{120°}{2} = \frac{\phi_m}{2}$

Phasor sum of ϕ'_r and ϕ_x, $\phi_r = \frac{\phi_m}{2} + \phi_m = 1.5\,\phi_m$

Note that the resultant flux is downward i.e., it is displaced 90° clockwise from position 1.

It follows from the above discussion that a 3-phase supply produces a rotating field of constant value (= 1.5 ϕ_m, where ϕ_m is the maximum flux due to any phase).

Speed of rotating magnetic field

The speed at which the rotating magnetic field revolves is called the synchronous speed (N_s). Referring to Fig. (8.6 (ii)), the time instant 4 represents the completion of one-quarter cycle of alternating current I_x from the time instant 1. During this one quarter cycle, the field has rotated through 90°. At a time instant represented by 13 or one complete cycle of current I_x from the origin, the field has completed one revolution. Therefore, for a 2-pole stator winding, the field makes one revolution in one cycle of current. In a 4-pole stator winding, it can be shown that the rotating field makes one revolution in two cycles of current. In general, fur P poles, the rotating field makes one revolution in P/2 cycles of current.

$$\therefore \qquad \text{Cycles of current} = \frac{P}{2} \times \text{revolutions of field}$$

or $$\text{Cycles of current per second} = \frac{P}{2} \times \text{revolutions of field per second}$$

Since revolutions per second is equal to the revolutions per minute (N_s) divided by 60 and the number of cycles per second is the frequency f,

$$\therefore \qquad f = \frac{P}{2} \times \frac{N_s}{60} = \frac{N_s P}{120}$$

or $$N_s = \frac{120\,f}{P}$$

The speed of the rotating magnetic field is the same as the speed of the alternator that is supplying power to the motor if the two have the same number of poles. Hence the magnetic flux is said to rotate at synchronous speed.

Direction of rotating magnetic field

The phase sequence of the three-phase voltage applied to the stator winding in Fig. (8.6 (ii)) is X-Y-Z. If this sequence is changed to X-Z-Y, it is observed that direction of rotation of the field is reversed i.e., the field rotates counterclockwise rather than clockwise. However, the number of poles and the speed at which the magnetic field rotates remain unchanged. Thus it is necessary only to change the phase sequence in order to change the direction of rotation of the magnetic field. For a three-phase supply, this can be done by interchanging any two of the three lines. As we shall see, the rotor in a 3-phase induction motor runs in the same direction as the rotating magnetic field. Therefore, the

direction of rotation of a 3-phase induction motor can be reversed by interchanging any two of the three motor supply lines.

8.4 Alternate Mathematical Analysis for Rotating Magnetic Field

We shall now use another useful method to find the magnitude and speed of the resultant flux due to three-phase currents. The three-phase sinusoidal currents produce fluxes ϕ_1, ϕ_2 and ϕ_3 which vary sinusoidally. The resultant flux at any instant will be the vector sum of all the three at that instant. The fluxes are represented by three variable magnitude vectors [See Fig. (8.11)]. In Fig. (8.11), the individual flux directions arc fixed but their magnitudes vary sinusoidally as does the current that produces them. To find the magnitude of the resultant flux, resolve each flux into horizontal and vertical components and then find their vector sum.

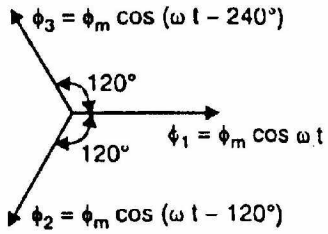

Fig.(8.11)

$$\phi_h = \phi_m \cos t\ \omega t - \phi_m \cos(\omega t - 120°)\cos 60° - \phi_m \cos(\omega t - 240°)\cos 60°$$

$$= \frac{3}{2}\phi_m \cos \omega t$$

$$\phi_v = 0 - \phi_m \cos(\omega t - 120°)\cos 60° + \phi_m \cos(\omega t - 240°)\cos 60° = \frac{3}{2}\phi_m \sin \omega t$$

The resultant flux is given by;

$$\phi_r = \sqrt{\phi_h^2 + \phi_v^2} = \frac{3}{2}\phi_m \left[\cos^2 \omega t + (-\sin \omega t)^2\right]^{1/2} = \frac{3}{2}\phi_m = 1.5\phi_m = \text{Constant}$$

Thus the resultant flux has constant magnitude (= 1.5 ϕ_m) and does not change with time. The angular displacement of ϕ_r relative to the OX axis is

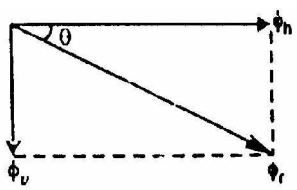

Fig.(8.12)

$$\tan\theta = \frac{\phi_v}{\phi_h} = \frac{\frac{3}{2}\phi_m \sin \omega t}{\frac{3}{2}\phi_m \cos \omega t} = \tan \omega t$$

$$\therefore \quad \theta = \omega t$$

Thus the resultant magnetic field rotates at constant angular velocity ω(= 2 πf) rad/sec. For a P-pole machine, the rotation speed (ω_m) is

$$\omega_m = \frac{2}{P}\omega \text{ rad/sec}$$

or $$\frac{2\pi N_s}{60} = \frac{2}{P} \times 2\pi f \qquad \text{... } N_s \text{ is in r.p.m.}$$

$$\therefore \quad N_s = \frac{120\,f}{P}$$

Thus the resultant flux due to three-phase currents is of constant value (= 1.5 ϕ_m where ϕ_m is the maximum flux in any phase) and this flux rotates around the stator winding at a synchronous speed of 120 f/P r.p.m.

For example, for a 6-pole, 50 Hz, 3-phase induction motor, N, = 120 × 50/6 = 1000 r.p.m. It means that flux rotates around the stator at a speed of 1000 r.p.m.

8.5 Principle of Operation

Consider a portion of 3-phase induction motor as shown in Fig. (8.13). The operation of the motor can be explained as under:

(i) When 3-phase stator winding is energized from a 3-phase supply, a rotating magnetic field is set up which rotates round the stator at synchronous speed N_s (= 120 f/P).

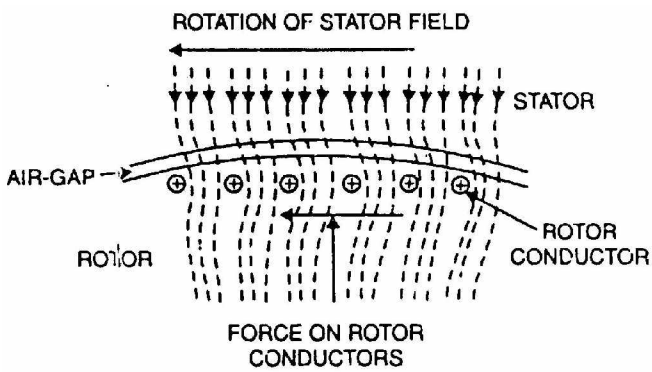

Fig.(1-)

(ii) The rotating field passes through the air gap and cuts the rotor conductors, which as yet, are stationary. Due to the relative speed between the rotating flux and the stationary rotor, e.m.f.s are induced in the rotor conductors. Since the rotor circuit is short-circuited, currents start flowing in the rotor conductors.

(iii) The current-carrying rotor conductors are placed in the magnetic field produced by the stator. Consequently, mechanical force acts on the rotor conductors. The sum of the mechanical forces on all the rotor conductors produces a torque which tends to move the rotor in the same direction as the rotating field.

(iv) The fact that rotor is urged to follow the stator field (i.e., rotor moves in the direction of stator field) can be explained by Lenz's law. According to this law, the direction of rotor currents will be such that they tend to oppose the cause producing them. Now, the cause producing the rotor currents is the relative speed between the rotating field and the stationary rotor conductors. Hence to reduce this relative speed, the rotor starts running in the same direction as that of stator field and tries to catch it.

8.6 Slip

We have seen above that rotor rapidly accelerates in the direction of rotating field. In practice, the rotor can never reach the speed of stator flux. If it did, there would be no relative speed between the stator field and rotor conductors, no induced rotor currents and, therefore, no torque to drive the rotor. The friction and windage would immediately cause the rotor to slow down. Hence, the rotor speed (N) is always less than the suitor field speed (N_s). This difference in speed depends upon load on the motor.

The difference between the synchronous speed N_s of the rotating stator field and the actual rotor speed N is called slip. It is usually expressed as a percentage of synchronous speed i.e.,

$$\text{\% age slip, } s = \frac{N_s - N}{N_s} \times 100$$

(i) The quantity $N_s - N$ is sometimes called slip speed.
(ii) When the rotor is stationary (i.e., N = 0), slip, s = 1 or 100 %.
(iii) In an induction motor, the change in slip from no-load to full-load is hardly 0.1% to 3% so that it is essentially a constant-speed motor.

8.7 Rotor Current Frequency

The frequency of a voltage or current induced due to the relative speed between a vending and a magnetic field is given by the general formula;

$$\text{Frequency} = \frac{NP}{120}$$

where N = Relative speed between magnetic field and the winding
P = Number of poles

For a rotor speed N, the relative speed between the rotating flux and the rotor is $N_s - N$. Consequently, the rotor current frequency f' is given by;

$$f' = \frac{(N_s - N)P}{120}$$

$$= \frac{s N_s P}{120} \qquad \left(\text{n } s = \frac{N_s - N}{N_s} \right)$$

$$= sf \qquad \left(\text{n } f = \frac{N_s P}{120} \right)$$

i.e., Rotor current frequency = Fractional slip x Supply frequency

(i) When the rotor is at standstill or stationary (i.e., s = 1), the frequency of rotor current is the same as that of supply frequency (f' = sf = 1× f = f).

(ii) As the rotor picks up speed, the relative speed between the rotating flux and the rotor decreases. Consequently, the slip s and hence rotor current frequency decreases.

Note. The relative speed between the rotating field and stator winding is $N_s - 0 = N_s$. Therefore, the frequency of induced current or voltage in the stator winding is $f = N_s P/120$—the supply frequency.

8.8 Effect of Slip on The Rotor Circuit

When the rotor is stationary, s = 1. Under these conditions, the per phase rotor e.m.f. E_2 has a frequency equal to that of supply frequency f. At any slip s, the relative speed between stator field and the rotor is decreased. Consequently, the rotor e.m.f. and frequency are reduced proportionally to sE_s and sf respectively. At the same time, per phase rotor reactance X_2, being frequency dependent, is reduced to sX_2.

Consider a 6-pole, 3-phase, 50 Hz induction motor. It has synchronous speed $N_s = 120\ f/P = 120 \times 50/6 = 1000$ r.p.m. At standsill, the relative speed between stator flux and rotor is 1000 r.p.m. and rotor e.m.f./phase = E_2(say). If the full-load speed of the motor is 960 r.p.m., then,

$$s = \frac{1000 - 960}{1000} = 0.04$$

(i) The relative speed between stator flux and the rotor is now only 40 r.p.m. Consequently, rotor e.m.f./phase is reduced to:

$$E_2 \times \frac{40}{1000} = 0.04E_2 \qquad \text{or} \qquad sE_2$$

(ii) The frequency is also reduced in the same ratio to:

$$50 \times \frac{40}{1000} = 50 \times 0.04 \qquad \text{or} \qquad sf$$

(iii) The per phase rotor reactance X_2 is likewise reduced to:

$$X_2 \times \frac{40}{1000} = 0.04X_2 \qquad \text{or} \qquad sX_2$$

Thus at any slip s,

Rotor e.m.f./phase = sE_2
Rotor reactance/phase = sX_2
Rotor frequency = sf

where E_2,X_2 and f are the corresponding values at standstill.

8.9 Rotor Current

Fig. (8.14) shows the circuit of a 3-phase induction motor at any slip s. The rotor is assumed to be of wound type and star connected. Note that rotor e.m.f./phase and rotor reactance/phase are s E_2 and sX_2 respectively. The rotor resistance/phase is R2 and is independent of frequency and, therefore, does not depend upon slip. Likewise, stator winding values R_1 and X_1 do not depend upon slip.

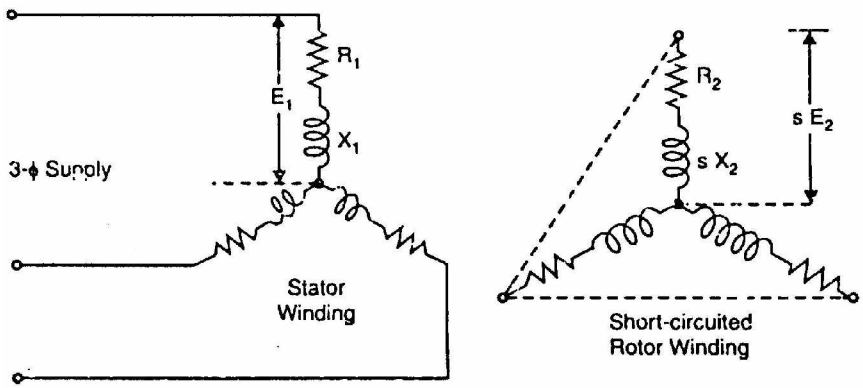

Fig.(8.14)

Since the motor represents a balanced 3-phase load, we need consider one phase only; the conditions in the other two phases being similar.

At standstill. Fig. (8.15 (i)) shows one phase of the rotor circuit at standstill.

$$\text{Rotor current/phase, } I_2 = \frac{E_2}{Z_2} = \frac{E_2}{\sqrt{R_2^2 + X_2^2}}$$

$$\text{Rotor p.f., } \cos\phi_2 = \frac{R_2}{Z_2} = \frac{R_2}{\sqrt{R_2^2 + X_2^2}}$$

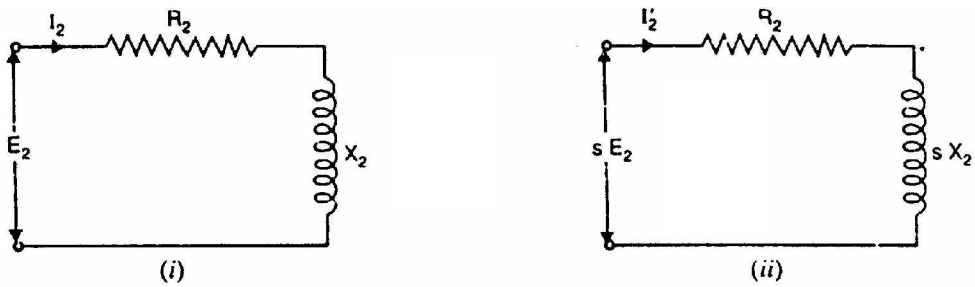

Fig.(8.15)

When running at slip s. Fig. (8.15 (ii)) shows one phase of the rotor circuit when the motor is running at slip s.

$$\text{Rotor current, } I'_2 = \frac{sE_2}{Z'_2} = \frac{sE_2}{\sqrt{R_2^2 + (sX_2)^2}}$$

Rotor p.f., $\cos\phi'_2 = \frac{R_2}{Z'_2} = \frac{R_2}{\sqrt{R_2^2 + (sX_2)^2}}$

8.10 Rotor Torque

The torque T developed by the rotor is directly proportional to:

(i) rotor current
(ii) rotor e.m.f.
(iii) power factor of the rotor circuit

$\therefore \quad T \propto E_2 I_2 \cos\phi_2$

or $\quad T = K E_2 I_2 \cos\phi_2$

where $\quad I_2$ = rotor current at standstill
E_2 = rotor e.m.f. at standstill
$\cos\phi_2$ = rotor p.f. at standstill

Note. The values of rotor e.m.f., rotor current and rotor power factor are taken for the given conditions.

8.11 Starting Torque (T_s)

Let $\quad E_2$ = rotor e.m.f. per phase at standstill
X_2 = rotor reactance per phase at standstill
R_2 = rotor resistance per phase

Rotor impedance/phase, $Z_2 = \sqrt{R_2^2 + X_2^2}$ ...at standstill

Rotor current/phase, $I_2 = \frac{E_2}{Z_2} = \frac{E_2}{\sqrt{R_2^2 + X_2^2}}$ ...at standstill

Rotor p.f., $\cos\phi_2 = \frac{R_2}{Z_2} = \frac{R_2}{\sqrt{R_2^2 + X_2^2}}$ ...at standstill

$\therefore$ Starting torque, $T_s = K E_2 I_2 \cos\phi_2$

$$= K E_2 \times \frac{E_2}{\sqrt{R_2^2 + X_2^2}} \times \frac{R_2}{\sqrt{R_2^2 + X_2^2}}$$

$$= \frac{K E_2^2 R_2}{R_2^2 + X_2^2}$$

Generally, the stator supply voltage V is constant so that flux per pole ϕ set up by the stator is also fixed. This in turn means that e.m.f. E_2 induced in the rotor will be constant.

$$\therefore \quad T_s = \frac{K_1 R_2}{R_2^2 + X_2^2} = \frac{K_1 R_2}{Z_2^2}$$

where K_1 is another constant.

It is clear that the magnitude of starting torque would depend upon the relative values of R_2 and X_2 i.e., rotor resistance/phase and standstill rotor reactance/phase.

It can be shown that $K = 3/2\ \pi\ N_s$.

$$\therefore \quad T_s = \frac{3}{2\pi\ N_s} \cdot \frac{E_2^2 R_2}{R_2^2 + X_2^2}$$

Note that here N_s is in r.p.s.

8.12 Condition for Maximum Starting Torque

It can be proved that starting torque will be maximum when rotor resistance/phase is equal to standstill rotor reactance/phase.

Now $$T_s = \frac{K_1 R_2}{R_2^2 + X_2^2} \qquad \text{(i)}$$

Differentiating eq. (i) w.r.t. R_2 and equating the result to zero, we get,

$$\frac{dT_s}{dR_2} = K_1 \left[\frac{1}{R_2^2 + X_2^2} - \frac{R_2(2R_2)}{\left(R_2^2 + X_2^2\right)^2} \right] = 0$$

or $$R_2^2 + X_2^2 = 2R_2^2$$

or $$R_2 = X_2$$

Hence starting torque will be maximum when:

Rotor resistance/phase = Standstill rotor reactance/phase

Under the condition of maximum starting torque, ϕ_2 = 45° and rotor power factor is 0.707 lagging [See Fig. (8.16 (ii))].

Fig. (8.16 (i)) shows the variation of starting torque with rotor resistance. As the rotor resistance is increased from a relatively low value, the starting torque increases until it becomes maximum when $R_2 = X_2$. If the rotor resistance is increased beyond this optimum value, the starting torque will decrease.

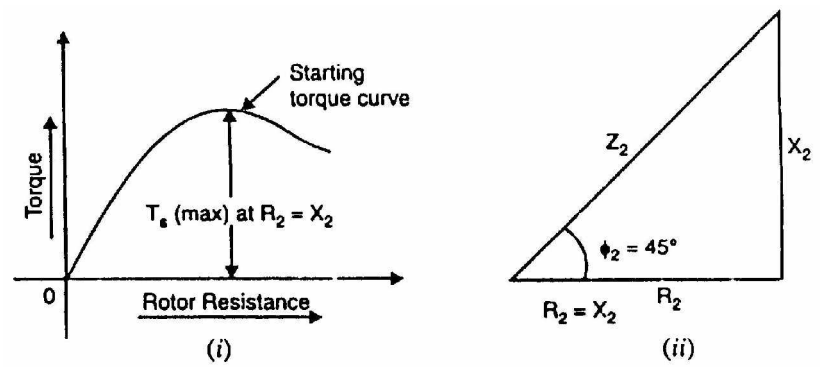

Fig.(8.16)

8.13 Effect of Change of Supply Voltage

$$T_s = \frac{K E_2^2 R_2}{R_2^2 + X_2^2}$$

Since $E_2 \propto$ Supply voltage V

$$\therefore \quad T_s = \frac{K_2 V^2 R_2}{R_2^2 + X_2^2}$$

where K_2 is another constant.

$$\therefore \quad T_s \propto V^2$$

Therefore, the starting torque is very sensitive to changes in the value of supply voltage. For example, a drop of 10% in supply voltage will decrease the starting torque by about 20%. This could mean the motor failing to start if it cannot produce a torque greater than the load torque plus friction torque.

8.14 Starting Torque of 3-Phase Induction Motors

The rotor circuit of an induction motor has low resistance and high inductance. At starting, the rotor frequency is equal to the stator frequency (i.e., 50 Hz) so that rotor reactance is large compared with rotor resistance. Therefore, rotor current lags the rotor e.m.f. by a large angle, the power factor is low and consequently the starting torque is small. When resistance is added to the rotor circuit, the rotor power factor is improved which results in improved starting torque. This, of course, increases the rotor impedance and, therefore, decreases the value of rotor current but the effect of improved power factor predominates and the starting torque is increased.

(i) **Squirrel-cage motors**. Since the rotor bars are permanently short-circuited, it is not possible to add any external resistance in the rotor circuit at starting. Consequently, the stalling torque of such motors is low. Squirrel

cage motors have starting torque of 1.5 to 2 times the full-load value with starting current of 5 to 9 times the full-load current.

(ii) **Wound rotor motors**. The resistance of the rotor circuit of such motors can be increased through the addition of external resistance. By inserting the proper value of external resistance (so that $R_2 = X_2$), maximum starting torque can be obtained. As the motor accelerates, the external resistance is gradually cut out until the rotor circuit is short-circuited on itself for running conditions.

8.15 Motor Under Load

Let us now discuss the behaviour of 3-phase induction motor on load.

(i) When we apply mechanical load to the shaft of the motor, it will begin to slow down and the rotating flux will cut the rotor conductors at a higher and higher rate. The induced voltage and resulting current in rotor conductors will increase progressively, producing greater and greater torque.

(ii) The motor and mechanical load will soon reach a state of equilibrium when the motor torque is exactly equal to the load torque. When this state is reached, the speed will cease to drop any more and the motor will run at the new speed at a constant rate.

(iii) The drop in speed of the induction motor on increased load is small. It is because the rotor impedance is low and a small decrease in speed produces a large rotor current. The increased rotor current produces a higher torque to meet the increased load on the motor. This is why induction motors are considered to be constant-speed machines. However, because they never actually turn at synchronous speed, they are sometimes called asynchronous machines.

Note that change in load on the induction motor is met through the adjustment of slip. When load on the motor increases, the slip increases slightly (i.e., motor speed decreases slightly). This results in greater relative speed between the rotating flux and rotor conductors. Consequently, rotor current is increased, producing a higher torque to meet the increased load. Reverse happens should the load on the motor decrease.

(iv) With increasing load, the increased load currents I'_2 are in such a direction so as to decrease the stator flux (Lenz's law), thereby decreasing the counter e.m.f. in the stator windings. The decreased counter e.m.f. allows motor stator current (I_1) to increase, thereby increasing the power input to the motor. It may be noted that action of the induction motor in adjusting its stator or primary current with

changes of current in the rotor or secondary is very much similar to the changes occurring in transformer with changes in load.

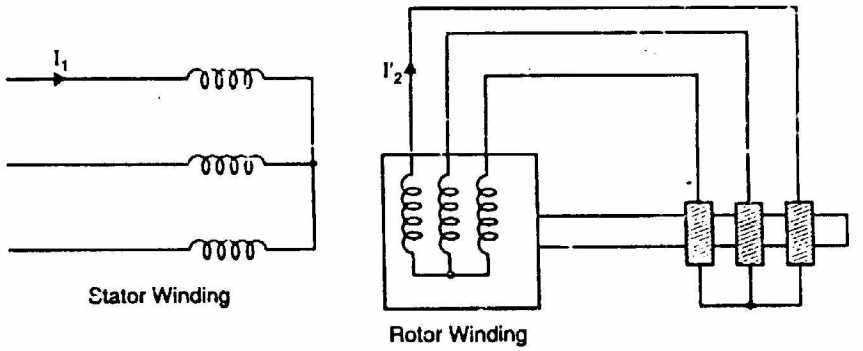

Fig.(8.17)

8.16 Torque Under Running Conditions

Let the rotor at standstill have per phase induced e.m.f. E_2, reactance X_2 and resistance R_2. Then under running conditions at slip s,

Rotor e.m.f./phase, $E'_2 = sE_2$

Rotor reactance/phase, $X'_2 = sX_2$

Rotor impedance/phase, $Z'_2 = \sqrt{R_2^2 + (sX_2)^2}$

Rotor current/phase, $I'_2 = \dfrac{E'_2}{Z'_2} = \dfrac{sE_2}{\sqrt{R_2^2 + (sX_2)^2}}$

Rotor p.f., $\cos\phi'_m = \dfrac{R_2}{\sqrt{R_2^2 + (sX_2)^2}}$

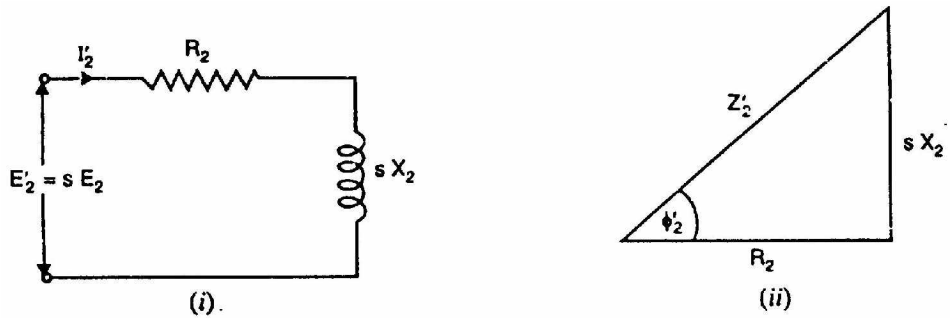

Fig.(8.18)

Running Torque, $T_r \propto E'_2 I'_2 \cos\phi'_2$

$\propto \phi I'_2 \cos\phi'_2$ (**n** $E'_2 \propto \phi$)

$$\propto \phi \times \frac{s\,E_2}{\sqrt{R_2^2+(s\,X_2)^2}} \times \frac{R_2}{\sqrt{R_2^2+(s\,X_2)^2}}$$

$$\propto \frac{\phi\,s\,E_2\,R_2}{R_2^2+(s\,X_2)^2}$$

$$= \frac{K\,\phi\,s\,E_2\,R_2}{R_2^2+(s\,X_2)^2}$$

$$= \frac{K_1\,s\,E_2^2\,R_2}{R_2^2+(s\,X_2)^2} \qquad (\because E_2 \propto \phi)$$

If the stator supply voltage V is constant, then stator flux and hence E_2 will be constant.

$$\therefore \quad T_r = \frac{K_2\,s\,R_2}{R_2^2+(s\,X_2)^2}$$

where K_2 is another constant.

It may be seen that running torque is:

(i) directly proportional to slip i.e., if slip increases (i.e., motor speed decreases), the torque will increase and vice-versa.

(ii) directly proportional to square of supply voltage $(\because E_2 \propto V)$.

It can be shown that value of $K_1 = 3/2\,\pi\,N_s$ where N_s is in r.p.s.

$$\therefore \quad T_r = \frac{3}{2\pi N_s} \cdot \frac{s\,E_2^2\,R_2}{R_2^2+(s\,X_2)^2} = \frac{3}{2\pi N_s} \cdot \frac{s\,E_2^2\,R_2}{(Z'_2)^2}$$

At starting, s = 1 so that starting torque is

$$T_s = \frac{3}{2\pi N_s} \cdot \frac{E_2^2\,R_2}{R_2^2+X_2^2}$$

8.17 Maximum Torque under Running Conditions

$$T_r = \frac{K_2\,s\,R_2}{R_2^2+s^2\,X_2^2} \qquad \text{(i)}$$

In order to find the value of rotor resistance that gives maximum torque under running conditions, differentiate exp. (i) w.r.t. s and equate the result to zero i.e.,

$$\frac{dT_r}{ds} = \frac{K_2\left[R_2\left(R_2^2+s^2\,X_2^2\right)-2sX_2^2(s\,R_2)\right]}{\left(R_2^2+s^2\,X_2^2\right)^2} = 0$$

or $$\left(R_2^2 + s^2\ X_2^2\right) - 2sX_2^2 = 0$$

or $$R_2^2 = s^2\ X_2^2$$

or $$R_2 = s\ X_2$$

Thus for maximum torque (T_m) under running conditions :

Rotor resistance/phase = Fractional slip × Standstill rotor reactance/phase

Now $$T_r \propto \frac{s\ R_2}{R_2^2 + s^2\ X_2^2}$$ … from exp. (i) above

For maximum torque, $R_2 = s\ X_2$. Putting $R_2 = s\ X_2$ in the above expression, the maximum torque T_m is given by;

$$T_m \propto \frac{1}{2\ X_2}$$

Slip corresponding to maximum torque, $s = R_2/X_2$.

It can be shown that:

$$T_m = \frac{3}{2\pi N_s} \cdot \frac{E_2^2}{2\ X_2}\ \text{N - m}$$

It is evident from the above equations that:

(i) The value of rotor resistance does not alter the value of the maximum torque but only the value of the slip at which it occurs.

(ii) The maximum torque varies inversely as the standstill reactance. Therefore, it should be kept as small as possible.

(iii) The maximum torque varies directly with the square of the applied voltage.

(iv) To obtain maximum torque at starting (s = 1), the rotor resistance must be made equal to rotor reactance at standstill.

8.18 Torque-Slip Characteristics

As shown in Sec. 8.16, the motor torque under running conditions is given by;

$$T = \frac{K_2\ s\ R_2}{R_2^2 + s^2\ X_2^2}$$

If a curve is drawn between the torque and slip for a particular value of rotor resistance R_2, the graph thus obtained is called torque-slip characteristic. Fig. (8.19) shows a family of torque-slip characteristics for a slip-range from s = 0 to s = 1 for various values of rotor resistance.

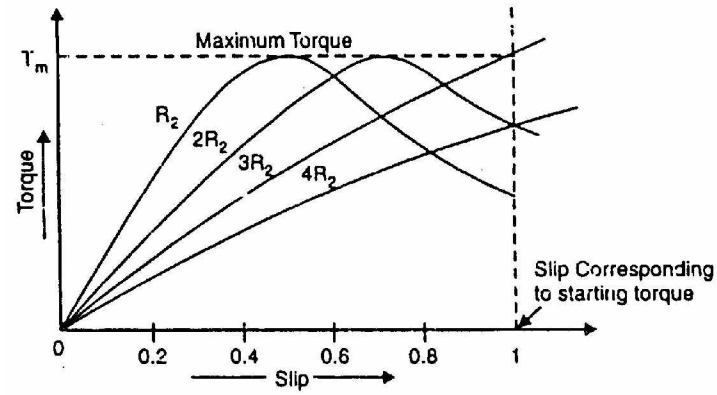

Fig.(8.19)

The following points may be noted carefully:

(i) At s = 0, T = 0 so that torque-slip curve starts from the origin.

(ii) At normal speed, slip is small so that s X_2 is negligible as compared to R_2.

$$\therefore \quad T \propto s/R_2$$

$$\propto s \qquad \text{... as } R_2 \text{ is constant}$$

Hence torque slip curve is a straight line from zero slip to a slip that corresponds to full-load.

(iii) As slip increases beyond full-load slip, the torque increases and becomes maximum at s = R_2/X_2. This maximum torque in an induction motor is called pull-out torque or break-down torque. Its value is at least twice the full-load value when the motor is operated at rated voltage and frequency.

(iv) to maximum torque, the term $s^2X_2^2$ increases very rapidly so that R_2^2 may be neglected as compared to $s^2X_2^2$.

$$\therefore \quad T \propto s/s^2X_2^2$$

$$\propto 1/s \qquad \text{... as } X_2 \text{ is constant}$$

Thus the torque is now inversely proportional to slip. Hence torque-slip curve is a rectangular hyperbola.

(v) The maximum torque remains the same and is independent of the value of rotor resistance. Therefore, the addition of resistance to the rotor circuit does not change the value of maximum torque but it only changes the value of slip at which maximum torque occurs.

8.19 Full-Load, Starting and Maximum Torques

$$T_f \propto \frac{s\,R_2}{R_2^2 + (s\,X_2)^2}$$

$$T_s \propto \frac{R_2}{R_2^2 + X_2^2}$$

$$T_m \propto \frac{1}{2\,X_2}$$

Note that s corresponds to full-load slip.

(i) $\therefore \quad \dfrac{T_m}{T_f} = \dfrac{R_2^2 + (s\,X_2)^2}{2s\,R_2\,X_2}$

Dividing the numerator and denominator on R.H.S. by X_2^2, we get,

$$\frac{T_m}{T_f} = \frac{(R_2/X_2)^2 + s^2}{2s(R_2/X_2)} = \frac{a^2 + s^2}{2as}$$

where $\quad a = \dfrac{R_2}{X_2} = \dfrac{\text{Rotor resistance/phase}}{\text{Standstill rotor reactance/phase}}$

(ii) $\quad \dfrac{T_m}{T_s} = \dfrac{R_2^2 + X_2^2}{2R_2\,X_2}$

Dividing the numerator and denominator on R.H.S. by X_2^2, we get,

$$\frac{T_m}{T_f} = \frac{(R_2/X_2)^2 + 1}{2(R_2/X_2)} = \frac{a^2 + 1}{2a}$$

where $\quad a = \dfrac{R_2}{X_2} = \dfrac{\text{Rotor resistance/phase}}{\text{Standstill rotor reactance/phase}}$

8.20 Induction Motor and Transformer Compared

An induction motor may be considered to be a transformer with a rotating short-circuited secondary. The stator winding corresponds to transformer primary and rotor winding to transformer secondary. However, the following differences between the two are worth noting:

(i) Unlike a transformer, the magnetic circuit of a 3-phase induction motor has an air gap. Therefore, the magnetizing current in a 3-phase induction motor is much larger than that of the transformer. For example, in an induction motor, it may be as high as 30-50 % of rated current whereas it is only 1-5% of rated current in a transformer.

(ii) In an induction motor, there is an air gap and the stator and rotor windings are distributed along the periphery of the air gap rather than concentrated

on a core as in a transformer. Therefore, the leakage reactances of stator and rotor windings are quite large compared to that of a transformer.

(iii) In an induction motor, the inputs to the stator and rotor are electrical but the output from the rotor is mechanical. However, in a transformer, input as well as output is electrical.

(iv) The main difference between the induction motor and transformer lies in the fact that the rotor voltage and its frequency are both proportional to slip s. If f is the stator frequency, E_2 is the per phase rotor e.m.f. at standstill and X_2 is the standstill rotor reactance/phase, then at any slip s, these values are:

Rotor e.m.f./phase, $E'_2 = s\,E_2$

Rotor reactance/phase, $X'_2 = sX_2$

Rotor frequency, $f' = sf$

8.21 Speed Regulation of Induction Motors

Like any other electrical motor, the speed regulation of an induction motor is given by:

$$\text{\% age speed regulation} = \frac{N_0 - N_{F.L.}}{N_{F.L.}} \times 100$$

where N_0 = no-load speed of the motor
$N_{F.L.}$ = full-load speed of the motor

If the no-load speed of the motor is 800 r.p.m. and its fall-load speed in 780 r.p.m., then change in speed is 800 – 780 = 20 r.p.m. and percentage speed regulation = 20 × 100/780 = 2.56%.

At no load, only a small torque is required to overcome the small mechanical losses and hence motor slip is small i.e., about 1%. When the motor is fully loaded, the slip increases slightly i.e., motor speed decreases slightly. It is because rotor impedance is low and a small decrease in speed produces a large rotor current. The increased rotor current produces a high torque to meet the full load on the motor. For this reason, the change in speed of the motor from no-load to full-load is small i.e., the speed regulation of an induction motor is low. The speed regulation of an induction motor is 3% to 5%. Although the motor speed does decrease slightly with increased load, the speed regulation is low enough that the induction motor is classed as a constant-speed motor.

8.22 Speed Control of 3-Phase Induction Motors

$$N = (1-s)N_s = (1-s)\frac{120\,f}{P} \qquad \text{(i)}$$

An inspection of eq. (i) reveals that the speed N of an induction motor can be varied by changing (i) supply frequency f (ii) number of poles P on the stator and (iii) slip s. The change of frequency is generally not possible because the commercial supplies have constant frequency. Therefore, the practical methods of speed control are either to change the number of stator poles or the motor slip.

1. Squirrel cage motors

The speed of a squirrel cage motor is changed by changing the number of stator poles. Only two or four speeds are possible by this method. Two-speed motor has one stator winding that may be switched through suitable control equipment to provide two speeds, one of which is half of the other. For instance, the winding may be connected for either 4 or 8 poles, giving synchronous speeds of 1500 and 750 r.p.m. Four-speed motors are equipped with two separate stator windings each of which provides two speeds. The disadvantages of this method are:

(i) It is not possible to obtain gradual continuous speed control.
(ii) Because of the complications in the design and switching of the interconnections of the stator winding, this method can provide a maximum of four different synchronous speeds for any one motor.

2. Wound rotor motors

The speed of wound rotor motors is changed by changing the motor slip. This can be achieved by;

(i) varying the stator line voltage
(ii) varying the resistance of the rotor circuit
(iii) inserting and varying a foreign voltage in the rotor circuit

8.23 Power Factor of Induction Motor

Like any other a.c. machine, the power factor of an induction motor is given by;

$$\text{Power factor, } \cos\phi = \frac{\text{Active component of current } (I\cos\phi)}{\text{Total current } (I)}$$

The presence of air-gap between the stator and rotor of an induction motor greatly increases the reluctance of the magnetic circuit. Consequently, an induction motor draws a large magnetizing current (I_m) to produce the required flux in the air-gap.

(i) At no load, an induction motor draws a large magnetizing current and a small active component to meet the no-load losses. Therefore, the induction motor takes a high no-load current lagging the applied voltage

by a large angle. Hence the power factor of an induction motor on no load is low i.e., about 0.1 lagging.

(ii) When an induction motor is loaded, the active component of current increases while the magnetizing component remains about the same. Consequently, the power factor of the motor is increased. However, because of the large value of magnetizing current, which is present regardless of load, the power factor of an induction motor even at full-load seldom exceeds 0.9 lagging.

8.24 Power Stages in an Induction Motor

The input electric power fed to the stator of the motor is converted into mechanical power at the shaft of the motor. The various losses during the energy conversion are:

1. Fixed losses

(i) Stator iron loss
(ii) Friction and windage loss

The rotor iron loss is negligible because the frequency of rotor currents under normal running condition is small.

2. Variable losses

(i) Stator copper loss
(ii) Rotor copper loss

Fig. (8.20) shows how electric power fed to the stator of an induction motor suffers losses and finally converted into mechanical power.

The following points may be noted from the above diagram:

(i) Stator input, P_i = Stator output + Stator losses
= Stator output + Stator Iron loss + Stator Cu loss

(ii) Rotor input, P_r = Stator output
It is because stator output is entirely transferred to the rotor through air-gap by electromagnetic induction.

(iii) Mechanical power available, $P_m = P_r$ – Rotor Cu loss
This mechanical power available is the gross rotor output and will produce a gross torque T_g.

(iv) Mechanical power at shaft, $P_{out} = P_m$ – Friction and windage loss
Mechanical power available at the shaft produces a shaft torque T_{sh}.

Clearly, $P_m - P_{out}$ = Friction and windage loss

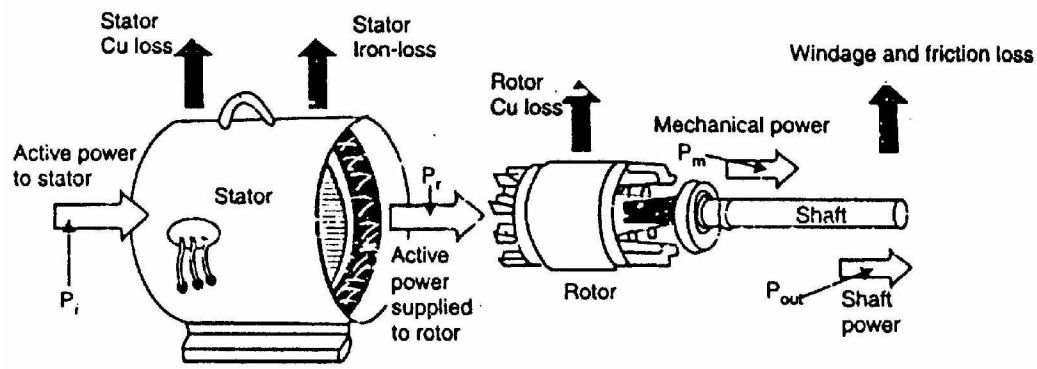

Fig.(8.20)

8.25 Induction Motor Torque

The mechanical power P available from any electric motor can be expressed as:

$$P = \frac{2\pi N T}{60} \quad \text{watts}$$

where N = speed of the motor in r.p.m.
T = torque developed in N-m

$$\therefore \quad T = \frac{60}{2\pi}\frac{P}{N} = 9.55\frac{P}{N} \text{ N - m}$$

If the gross output of the rotor of an induction motor is P_m and its speed is N r.p.m., then gross torque T developed is given by:

$$T_g = 9.55\frac{P_m}{N} \text{ N - m}$$

Similarly, $$T_{sh} = 9.55\frac{P_{out}}{N} \text{ N - m}$$

Note. Since windage and friction loss is small, $T_g = T_{sh}$,. This assumption hardly leads to any significant error.

8.26 Rotor Output

If T_g newton-metre is the gross torque developed and N r.p.m. is the speed of the rotor, then,

$$\text{Gross rotor output} = \frac{2\pi N T_g}{60} \quad \text{watts}$$

If there were no copper losses in the rotor, the output would equal rotor input and the rotor would run at synchronous speed N_s.

$$\therefore \quad \text{Rotor input} = \frac{2\pi N_s T_g}{60} \quad \text{watts}$$

$$\therefore \quad \text{Rotor Cu loss} = \text{Rotor input} - \text{Rotor output}$$

$$= \frac{2\pi T_g}{60}(N_s - N)$$

(i) $$\frac{\text{Rotor Cu loss}}{\text{Rotor input}} = \frac{N_s - N}{N_s} = s$$

$$\therefore \quad \text{Rotor Cu loss} = s \times \text{Rotor input}$$

(ii) Gross rotor output, P_m = Rotor input – Rotor Cu loss

= Rotor input – $s \times$ Rotor input

$$\therefore \quad P_m = \text{Rotor input } (1 - s)$$

(iii) $$\frac{\text{Gross rotor output}}{\text{Rotor input}} = 1 - s = \frac{N}{N_s}$$

(iv) $$\frac{\text{Rotor Cu loss}}{\text{Gross rotor output}} = \frac{s}{1-s}$$

It is clear that if the input power to rotor is P_r then s P_r is lost as rotor Cu loss and the remaining $(1 - s)P_r$ is converted into mechanical power. Consequently, induction motor operating at high slip has poor efficiency.

Note.

$$\frac{\text{Gross rotor output}}{\text{Rotor input}} = 1 - s$$

If the stator losses as well as friction and windage losses arc neglected, then,

Gross rotor output = Useful output

Rotor input = Stator input

$$\therefore \quad \frac{\text{Useful output}}{\text{Stator output}} = 1 - s = \text{Efficiency}$$

Hence the approximate efficiency of an induction motor is 1 – s. Thus if the slip of an induction motor is 0.125, then its approximate efficiency is = 1 – 0.125 = 0.875 or 87.5%.

8.27 Induction Motor Torque Equation

The gross torque T_g developed by an induction motor is given by;

$$T_g = \frac{\text{Rotor input}}{2\pi\ N_s} \qquad \text{... } N_s \text{ is r.p.s.}$$

$$= \frac{60 \times \text{Rotor input}}{2\pi\ N_s} \qquad \text{(See Sec. 8.26)} \qquad \text{... } N_s \text{ is r.p.s.}$$

Now $\quad \text{Rotor input} = \dfrac{\text{Rotor Cu loss}}{s} = \dfrac{3(I'_2)^2 R_2}{s} \qquad$ (i)

As shown in Sec. 8.16, under running conditions,

$$I'_2 = \frac{s\ E_2}{\sqrt{R_2^2 + (s\ X_2)^2}} = \frac{s\ K\ E_1}{\sqrt{R_2^2 + (s\ X_2)^2}}$$

where $\quad K = \text{Transformation ratio} = \dfrac{\text{Rotor turns/phase}}{\text{Stator turns/phase}}$

$$\therefore \quad \text{Rotor input} = 3 \times \frac{s^2\ E_2^2 R_2}{R_2^2 + (s\ X_2)^2} \times \frac{1}{s} = \frac{3\ s\ E_2^2 R_2}{R_2^2 + (s\ X_2)^2}$$

(Putting me value of I'_2 in eq.(i))

Also $\quad \text{Rotor input} = 3 \times \dfrac{s^2\ K^2\ E_1^2 R_2}{R_2^2 + (s\ X_2)^2} \times \dfrac{1}{s} = \dfrac{3\ s\ K^2 E_1^2 R_2}{R_2^2 + (s\ X_2)^2}$

(Putting me value of I'_2 in eq.(i))

$$\therefore \quad T_g = \frac{\text{Rotor input}}{2\pi\ N_s} = \frac{3}{2\pi\ N_s} \times \frac{s\ E_2^2 R_2}{R_2^2 + (s\ X_2)^2} \qquad \text{...in terms of } E_2$$

$$= \frac{3}{2\pi\ N_s} \times \frac{s\ K^2\ E_1^2 R_2}{R_2^2 + (s\ X_2)^2} \qquad \text{...in terms of } E_1$$

Note that in the above expressions of T_g, the values E_1, E_2, R_2 and X_2 represent the phase values.

8.28 Performance Curves of Squirrel-Cage Motor

The performance curves of a 3-phase induction motor indicate the variations of speed, power factor, efficiency, stator current and torque for different values of load. However, before giving the performance curves in one graph, it is desirable to discuss the variation of torque, and stator current with slip.

(i) Variation of torque and stator current with slip

Fig. (8.21) shows the variation of torque and stator current with slip for a standard squirrel-cage motor. Generally, the rotor resistance is low so that full-

load current occurs at low slip. Then even at full-load f' (= sf) and. therefore, X'_2 (= 2π f' L_2) are low. Between zero and full-load, rotor power factor (= cos ϕ'_2) and rotor impedance (= Z'_2) remain practically constant. Therefore, rotor current $I'_2(E'_2/Z'_2)$ and, therefore, torque (T_r) increase directly with the slip. Now stator current I_1 increases in proportion to I'_2. This is shown in Fig. (8.21) where T_r and I_1 are indicated as straight lines from no-load to full-load. As load and slip are increased beyond full-load, the increase in rotor reactance becomes appreciable. The increasing value of rotor impedance not only decreases the rotor power factor cos ϕ'_2 (= R_2/Z'_2) but also lowers the rate of increase of rotor current. As a result, the torque T_r and stator current I_1 do not increase directly with slip as indicated in Fig. (8.21). With the decreasing power factor and the lowered rate of increase in rotor current, the stator current I_1 and torque T_r increase at a lower rate. Finally, torque T_r reaches the maximum value at about 25% slip in the standard squirrel cage motor. This maximum value of torque is called the pullout torque or breakdown torque. If the load is increased beyond the breakdown point, the decrease in rotor power factor is greater than the increase in rotor current, resulting in a decreasing torque. The result is that motor slows down quickly and comes to a stop.

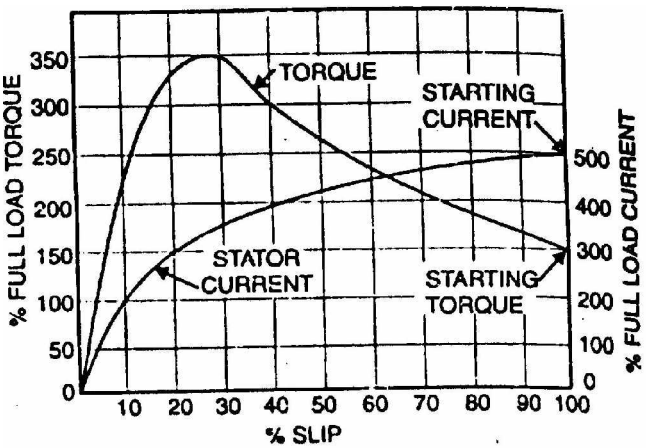

Fig.(8.21)

In Fig. (8.21), the value of torque at starting (i.e., s = 100%) is 1.5 times the full-load torque. The starting current is about five times the full-load current. The motor is essentially a constant-speed machine having speed characteristics about the same as a d.c. shunt motor.

(ii) Performance curves

Fig. (8.22) shows the performance curves of 3-phase squirrel cage induction motor.

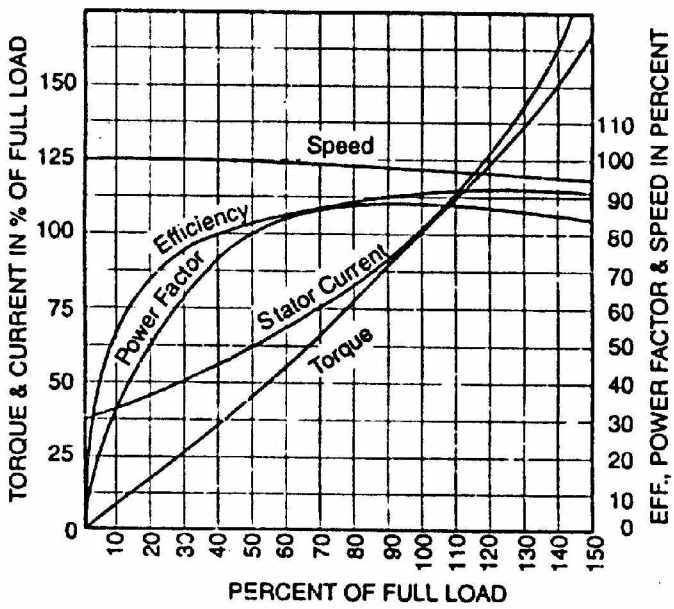

Fig.(8.22)

The following points may be noted:

(a) At no-load, the rotor lags behind the stator flux by only a small amount, since the only torque required is that needed to overcome the no-load losses. As mechanical load is added, the rotor speed decreases. A decrease in rotor speed allows the constant-speed rotating field to sweep across the rotor conductors at a faster rate, thereby inducing large rotor currents. This results in a larger torque output at a slightly reduced speed. This explains for speed-load curve in Fig. (8.22).

(b) At no-load, the current drawn by an induction motor is largely a magnetizing current; the no-load current lagging the applied voltage by a large angle. Thus the power factor of a lightly loaded induction motor is very low. Because of the air gap, the reluctance of the magnetic circuit is high, resulting in a large value of no-load current as compared with a transformer. As load is added, the active or power component of current increases, resulting in a higher power factor. However, because of the large value of magnetizing current, which is present regardless of load, the power factor of an induction motor even at full-load seldom exceeds 90%. Fig. (8.22) shows the variation of power factor with load of a typical squirrel-cage induction motor.

(c) $$\text{Efficiency} = \frac{\text{Output}}{\text{Output} + \text{Losses}}$$

The losses occurring in a 3-phase induction motor are Cu losses in stator and rotor windings, iron losses in stator and rotor core and friction and windage losses. The iron losses and friction and windage losses are almost independent of load. Had I^2R been constant, the efficiency of the motor would have increased with load. But I^2R loss depends upon load.

Therefore, the efficiency of the motor increases with load but the curve is dropping at high loads.

(d) At no-load, the only torque required is that needed to overcome no-load losses. Therefore, stator draws a small current from the supply. As mechanical load is added, the rotor speed decreases. A decrease in rotor speed allows the constant-speed rotating field to sweep across the rotor conductors at a faster rate, thereby inducing larger rotor currents. With increasing loads, the increased rotor currents are in such a direction so as to decrease the staler flux, thereby temporarily decreasing the counter e.m.f. in the stator winding. The decreased counter e.m.f. allows more stator current to flow.

(e) Output = Torque × Speed

Since the speed of the motor does not change appreciably with load, the torque increases with increase in load.

8.29 Equivalent Circuit of 3-Phase Induction Motor at Any Slip

In a 3-phase induction motor, the stator winding is connected to 3-phase supply and the rotor winding is short-circuited. The energy is transferred magnetically from the stator winding to the short-circuited, rotor winding. Therefore, an induction motor may be considered to be a transformer with a rotating secondary (short-circuited). The stator winding corresponds to transformer primary and the rotor finding corresponds to transformer secondary. In view of the similarity of the flux and voltage conditions to those in a transformer, one can expect that the equivalent circuit of an induction motor will be similar to that of a transformer. Fig. (8.23) shows the equivalent circuit (though not the only one) per phase for an induction motor. Let us discuss the stator and rotor circuits separately.

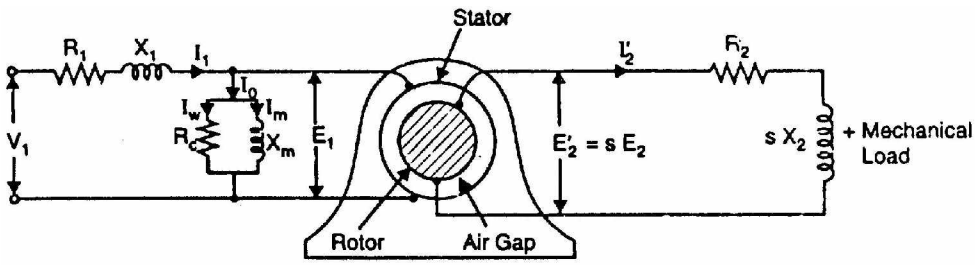

Fig.(8.23)

Stator circuit. In the stator, the events are very similar to those in the transformer primal y. The applied voltage per phase to the stator is V_1 and R_1 and X_1 are the stator resistance and leakage reactance per phase respectively. The applied voltage V_1 produces a magnetic flux which links the stator winding (i.e., primary) as well as the rotor winding (i.e., secondary). As a result, self-

induced e.m.f. E_1 is induced in the stator winding and mutually induced e.m.f. E'_2(= s E_2 = s K E_1 where K is transformation ratio) is induced in the rotor winding. The flow of stator current I_1 causes voltage drops in R_1 and X_1.

$$\therefore \quad V_1 = -E_1 + I_1(R_1 + j\,X_1) \qquad \text{...phasor sum}$$

When the motor is at no-load, the stator winding draws a current I_0. It has two components viz., (i) which supplies the no-load motor losses and (ii) magnetizing component I_m which sets up magnetic flux in the core and the air-gap. The parallel combination of R_c and X_m, therefore, represents the no-load motor losses and the production of magnetic flux respectively.

$$I_0 = I_w + I_m$$

Rotor circuit. Here R_2 and X_2 represent the rotor resistance and standstill rotor reactance per phase respectively. At any slip s, the rotor reactance will be s X_2 The induced voltage/phase in the rotor is E'_2 = s E_2 = s K E_1. Since the rotor winding is short-circuited, the whole of e.m.f. E'_2 is used up in circulating the rotor current I'_2.

$$\therefore \quad E'_2 = I'_2(R_2 + j\,s\,X_2)$$

The rotor current I'_2 is reflected as I''_2 (= K I'_2) in the stator. The phasor sum of I''_2 and I_0 gives the stator current I_1.

It is important to note that input to the primary and output from the secondary of a transformer are electrical. However, in an induction motor, the inputs to the stator and rotor are electrical but the output from the rotor is mechanical. To facilitate calculations, it is desirable and necessary to replace the mechanical load by an equivalent electrical load. We then have the transformer equivalent circuit of the induction motor.

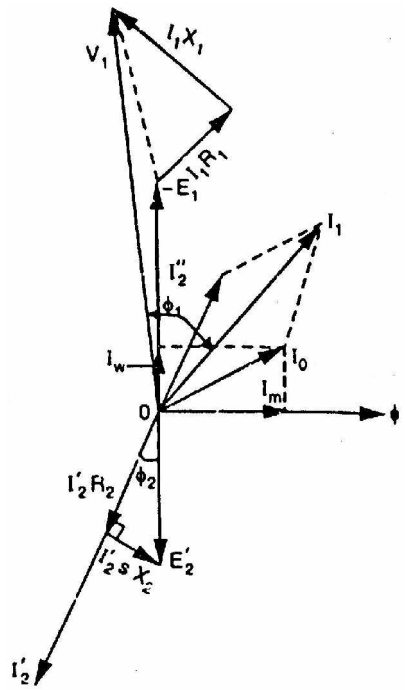

Fig.(8.24)

It may be noted that even though the frequencies of stator and rotor currents are different, yet the magnetic fields due to them rotate at synchronous speed N_s. The stator currents produce a magnetic flux which rotates at a speed N_s. At slip s, the speed of rotation of the rotor field relative to the rotor surface in the direction of rotation of the rotor is

$$= \frac{120\,f'}{P} = \frac{120\,s\,f}{P} = s\,N_s$$

But the rotor is revolving at a speed of N relative to the stator core. Therefore, the speed of rotor

field relative to stator core

$$= sN_s + N = (N_s - N) + N = N_s$$

Thus no matter what the value of slip s, the stator and rotor magnetic fields are synchronous with each other when seen by an observer stationed in space. Consequently, the 3-phase induction motor can be regarded as being equivalent to a transformer having an air-gap separating the iron portions of the magnetic circuit carrying the primary and secondary windings.

Fig. (8.24) shows the phasor diagram of induction motor.

8.30 Equivalent Circuit of the Rotor

We shall now see how mechanical load of the motor is replaced by the equivalent electrical load. Fig. (8.25 (i)) shows the equivalent circuit per phase of the rotor at slip s. The rotor phase current is given by;

$$I'_2 = \frac{s\,E_2}{\sqrt{R_2^2 + (s\,X_2)^2}}$$

Mathematically, this value is unaltered by writing it as:

$$I'_2 = \frac{E_2}{\sqrt{(R_2/s)^2 + (X_2)^2}}$$

As shown in Fig. (8.25 (ii)), we now have a rotor circuit that has a fixed reactance X_2 connected in series with a variable resistance R_2/s and supplied with constant voltage E_2. Note that Fig. (8.25 (ii)) transfers the variable to the resistance without altering power or power factor conditions.

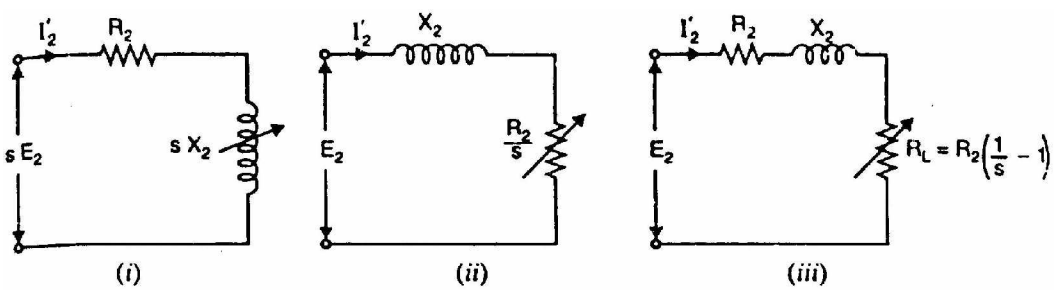

Fig.(8.25)

The quantity R_2/s is greater than R_2 since s is a fraction. Therefore, R_2/s can be divided into a fixed part R_2 and a variable part $(R_2/s - R_2)$ i.e.,

$$\frac{R_2}{s} = R_2 + R_2\left(\frac{1}{s} - 1\right)$$

(i) The first part R_2 is the rotor resistance/phase, and represents the rotor Cu loss.

(ii) The second part $R_2\left(\frac{1}{s}-1\right)$ is a variable-resistance load. The power delivered to this load represents the total mechanical power developed in the rotor. Thus mechanical load on the induction motor can be replaced by a variable-resistance load of value $R_2\left(\frac{1}{s}-1\right)$. This is

$$\therefore \quad R_L = R_2\left(\frac{1}{s}-1\right)$$

Fig. (8.25 (iii)) shows the equivalent rotor circuit along with load resistance R_L.

8.31 Transformer Equivalent Circuit of Induction Motor

Fig. (8.26) shows the equivalent circuit per phase of a 3-phase induction motor. Note that mechanical load on the motor has been replaced by an equivalent electrical resistance R_L given by;

$$R_L = R_2\left(\frac{1}{s}-1\right) \qquad \text{(i)}$$

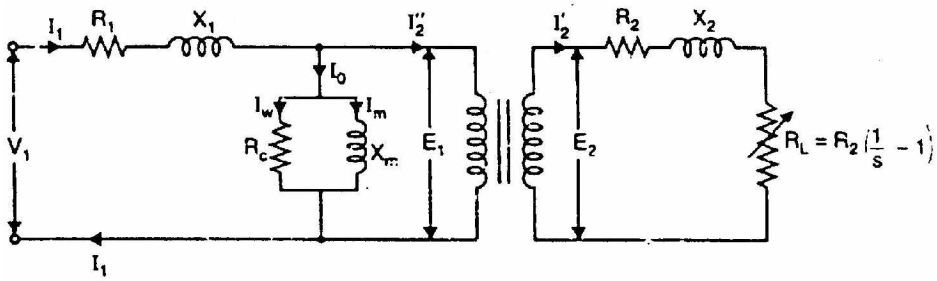

Fig.(8.26)

Note that circuit shown in Fig. (8.26) is similar to the equivalent circuit of a transformer with secondary load equal to R_2 given by eq. (i). The rotor e.m.f. in the equivalent circuit now depends only on the transformation ratio K (= E_2/E_1).

Therefore; induction motor can be represented as an equivalent transformer connected to a variable-resistance load R_L given by eq. (i). The power delivered to R_L represents the total mechanical power developed in the rotor. Since the equivalent circuit of Fig. (8.26) is that of a transformer, the secondary (i.e., rotor) values can be transferred to primary (i.e., stator) through the appropriate use of transformation ratio K. Recall that when shifting resistance/reactance from secondary to primary, it should be divided by K^2 whereas current should be multiplied by K. The equivalent circuit of an induction motor referred to primary is shown in Fig. (8.27).

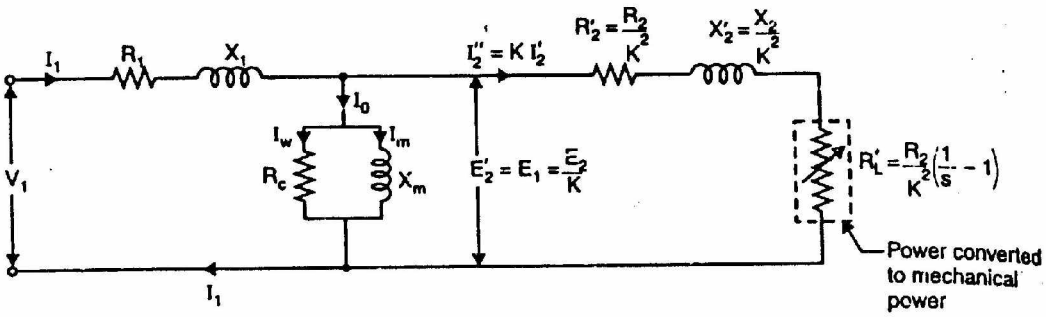

Fig.(8.27)

Note that the element (i.e., R'_L) enclosed in the dotted box is the equivalent electrical resistance related to the mechanical load on the motor. The following points may be noted from the equivalent circuit of the induction motor:

(i) At no-load, the slip is practically zero and the load R'_L is infinite. This condition resembles that in a transformer whose secondary winding is open-circuited.

(ii) At standstill, the slip is unity and the load R'_L is zero. This condition resembles that in a transformer whose secondary winding is short-circuited.

(iii) When the motor is running under load, the value of R'_L will depend upon the value of the slip s. This condition resembles that in a transformer whose secondary is supplying variable and purely resistive load.

(iv) The equivalent electrical resistance R'_L related to mechanical load is slip or speed dependent. If the slip s increases, the load R'_L decreases and the rotor current increases and motor will develop more mechanical power. This is expected because the slip of the motor increases with the increase of load on the motor shaft.

8.32 Power Relations

The transformer equivalent circuit of an induction motor is quite helpful in analyzing the various power relations in the motor. Fig. (8.28) shows the equivalent circuit per phase of an induction motor where all values have been referred to primary (i.e., stator).

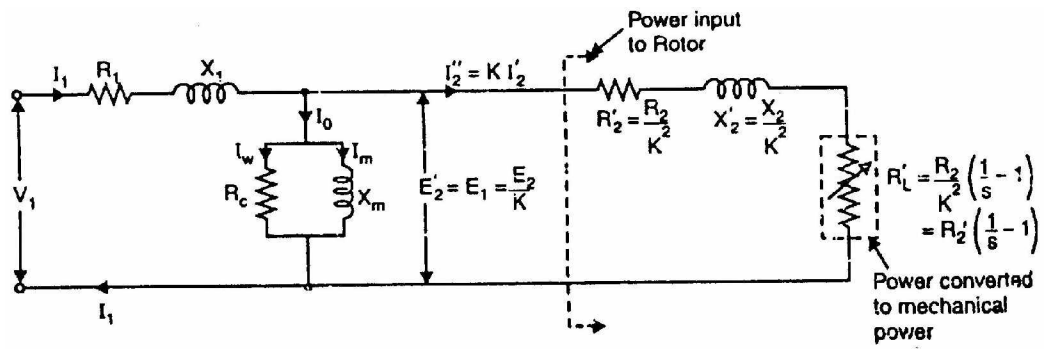

Fig.(8.28)

(i) Total electrical load $= R'_2\left(\frac{1}{s}-1\right)+R'_2=\frac{R'_2}{s}$

Power input to stator = $3V_1 I_1 \cos\phi_1$

There will be stator core loss and stator Cu loss. The remaining power will be the power transferred across the air-gap i.e., input to the rotor.

(ii) Rotor input = $\frac{3(I''_2)^2 R'_2}{s}$

Rotor Cu loss = $3(I''_2)^2 R'_2$

Total mechanical power developed by the rotor is

P_m = Rotor input – Rotor Cu loss

$$= \frac{3(I''_2)^2 R'_2}{s} 3(I''_2)^2 R'_2 = 3(I''_2)^2 R'_2\left(\frac{1}{s}-1\right)$$

This is quite apparent from the equivalent circuit shown in Fig. (8.28).

(iii) If T_g is the gross torque developed by the rotor, then,

$$P_m = \frac{2\pi N\, T_g}{60}$$

or $$3(I''_2)^2 R'_2\left(\frac{1}{s}-1\right)=\frac{2\pi N\, T_g}{60}$$

or $$3(I''_2)^2 R'_2\left(\frac{1-s}{s}\right)=\frac{2\pi N\, T_g}{60}$$

or $$3(I''_2)^2 R'_2\left(\frac{1-s}{s}\right)=\frac{2\pi N_s(1-s)\, T_g}{60} \qquad [\textbf{n}\ N = N_s(1-s)]$$

$$\therefore \quad T_g = \frac{3(I''_2)^2 R'_2/s}{2\pi N_s/60} \quad \text{N - m}$$

or $$T_g = 9.55\frac{3(I''_2)^2 R'_2/s}{N_s} \quad \text{N - m}$$

Note that shaft torque T_{sh} will be less than T_g by the torque required to meet windage and frictional losses.

8.33 Approximate Equivalent Circuit of Induction Motor

As in case of a transformer, the approximate equivalent circuit of an induction motor is obtained by shifting the shunt branch ($R_c - X_m$) to the input terminals as shown in Fig. (8.29). This step has been taken on the assumption that voltage drop in R_1 and X_1 is small and the terminal voltage V_1 does not appreciably differ from the induced voltage E_1. Fig. (8.29) shows the approximate equivalent circuit per phase of an induction motor where all values have been referred to primary (i.e., stator).

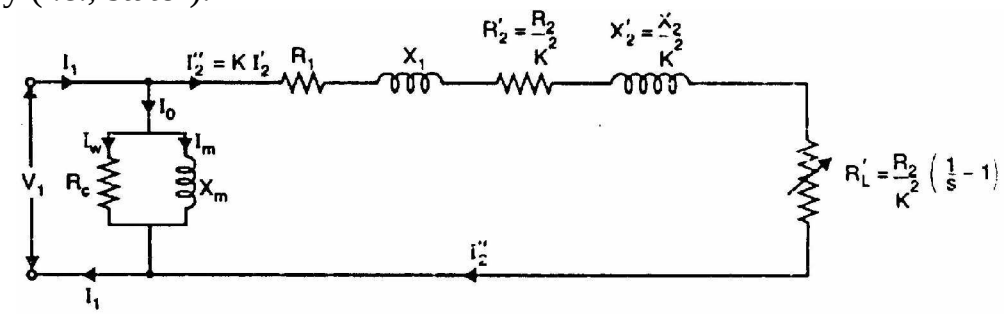

Fig.(8.29)

The above approximate circuit of induction motor is not so readily justified as with the transformer. This is due to the following reasons:

(i) Unlike that of a power transformer, the magnetic circuit of the induction motor has an air-gap. Therefore, the exciting current of induction motor (30 to 40% of full-load current) is much higher than that of the power transformer. Consequently, the exact equivalent circuit must be used for accurate results.

(ii) The relative values of X_1 and X_2 in an induction motor are larger than the corresponding ones to be found in the transformer. This fact does not justify the use of approximate equivalent circuit

(iii) In a transformer, the windings are concentrated whereas in an induction motor, the windings are distributed. This affects the transformation ratio.

In spite of the above drawbacks of approximate equivalent circuit, it yields results that are satisfactory for large motors. However, approximate equivalent circuit is not justified for small motors.

8.34 Starting of 3-Phase Induction Motors

The induction motor is fundamentally a transformer in which the stator is the primary and the rotor is short-circuited secondary. At starting, the voltage induced in the induction motor rotor is maximum (**n** s = 1). Since the rotor impedance is low, the rotor current is excessively large. This large rotor current is reflected in the stator because of transformer action. This results in high starting current (4 to 10 times the full-load current) in the stator at low power

factor and consequently the value of starting torque is low. Because of the short duration, this value of large current does not harm the motor if the motor accelerates normally. However, this large starting current will produce large line-voltage drop. This will adversely affect the operation of other electrical equipment connected to the same lines. Therefore, it is desirable and necessary to reduce the magnitude of stator current at starting and several methods are available for this purpose.

8.35 Methods of Starting 3-Phase Induction Motors

The method to be employed in starting a given induction motor depends upon the size of the motor and the type of the motor. The common methods used to start induction motors are:

(i) Direct-on-line starting
(ii) Stator resistance starting
(iii) Autotransformer starting
(iv) Star-delta starting
(v) Rotor resistance starting

Methods (i) to (iv) are applicable to both squirrel-cage and slip ring motors. However, method (v) is applicable only to slip ring motors. In practice, any one of the first four methods is used for starting squirrel cage motors, depending upon ,the size of the motor. But slip ring motors are invariably started by rotor resistance starting.

8.36 Methods of Starting Squirrel-Cage Motors

Except direct-on-line starting, all other methods of starting squirrel-cage motors employ reduced voltage across motor terminals at starting.

(i) Direct-on-line starting

This method of starting in just what the name implies—the motor is started by connecting it directly to 3-phase supply. The impedance of the motor at standstill is relatively low and when it is directly connected to the supply system, the starting current will be high (4 to 10 times the full-load current) and at a low power factor. Consequently, this method of starting is suitable for relatively small (up to 7.5 kW) machines.

Relation between starling and F.L. torques. We know that:

Rotor input = $2\pi N_s T = kT$

But Rotor Cu loss = $s \times$ Rotor input

$$\therefore \quad 3(I'_2)^2 R_2 = s \times kT$$

or $$T \propto (I'_2)^2 / s$$

or $\qquad T \propto I_1^2/s \qquad (\because I'_2 \propto I_1)$

If I_{st} is the starting current, then starting torque (T_{st}) is

$$T \propto I_{st}^2 \qquad (\because \text{ at starting } s = 1)$$

If I_f is the full-load current and s_f is the full-load slip, then,

$$T_f \propto I_f^2/s_f$$

$$\therefore \quad \frac{T_{st}}{T_f} = \left(\frac{I_{st}}{I_f}\right)^2 \times s_f$$

When the motor is started direct-on-line, the starting current is the short-circuit (blocked-rotor) current I_{sc}.

$$\therefore \quad \frac{T_{st}}{T_f} = \left(\frac{I_{sc}}{I_f}\right)^2 \times s_f$$

Let us illustrate the above relation with a numerical example. Suppose $I_{sc} = 5\ I_f$ and full-load slip $s_f = 0.04$. Then,

$$\frac{T_{st}}{T_f} = \left(\frac{I_{sc}}{I_f}\right)^2 \times s_f = \left(\frac{5\ I_f}{I_f}\right)^2 \times 0.04 = (5)^2 \times 0.04 = 1$$

$$\therefore \quad T_{st} = T_f$$

Note that starting current is as large as five times the full-load current but starting torque is just equal to the full-load torque. Therefore, starting current is very high and the starting torque is comparatively low. If this large starting current flows for a long time, it may overheat the motor and damage the insulation.

(ii) Stator resistance starting

In this method, external resistances are connected in series with each phase of stator winding during starting. This causes voltage drop across the resistances so that voltage available across motor terminals is reduced and hence the starting current. The starting resistances are gradually cut out in steps (two or more steps) from the stator circuit as the motor picks up speed. When the motor attains rated speed, the resistances are completely cut out and full line voltage is applied to the rotor.

This method suffers from two drawbacks. First, the reduced voltage applied to the motor during the starting period lowers the starting torque and hence increases the accelerating time. Secondly, a lot of power is wasted in the starting resistances.

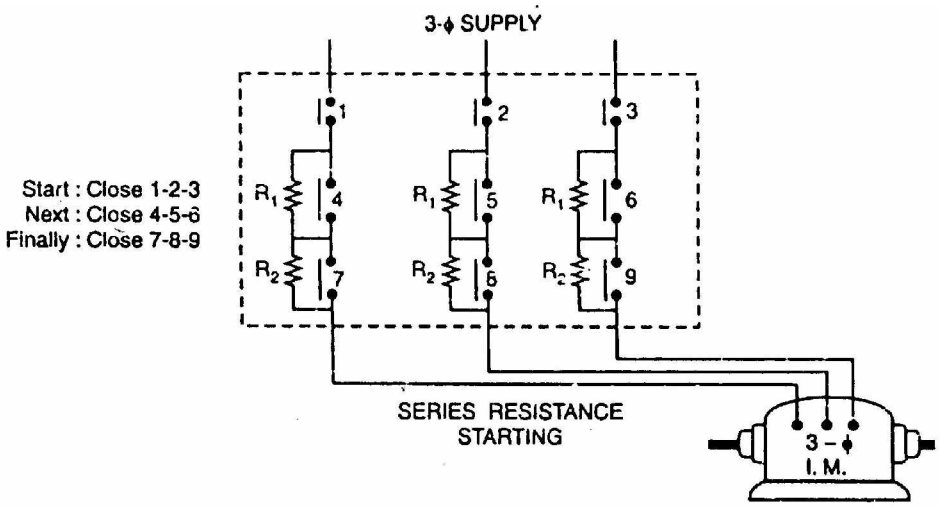

Fig.(8.30)

Relation between starting and F.L. torques. Let V be the rated voltage/phase. If the voltage is reduced by a fraction x by the insertion of resistors in the line, then voltage applied to the motor per phase will be xV.

$$I_{st} = x\, I_{sc}$$

Now $$\frac{T_{st}}{T_f} = \left(\frac{I_{st}}{I_f}\right)^2 \times s_f$$

or $$\frac{T_{st}}{T_f} = x^2\left(\frac{I_{sc}}{I_f}\right)^2 \times s_f$$

Thus while the starting current reduces by a fraction x of the rated-voltage starting current (I_{sc}), the starting torque is reduced by a fraction x^2 of that obtained by direct switching. The reduced voltage applied to the motor during the starting period lowers the starting current but at the same time increases the accelerating time because of the reduced value of the starting torque. Therefore, this method is used for starting small motors only.

(iii) Autotransformer starting

This method also aims at connecting the induction motor to a reduced supply at starting and then connecting it to the full voltage as the motor picks up sufficient speed. Fig. (8.31) shows the circuit arrangement for autotransformer starting. The tapping on the autotransformer is so set that when it is in the circuit, 65% to 80% of line voltage is applied to the motor.

At the instant of starting, the change-over switch is thrown to “start” position. This puts the autotransformer in the circuit and thus reduced voltage is applied to the circuit. Consequently, starting current is limited to safe value. When the motor attains about 80% of normal speed, the changeover switch is thrown to

"run" position. This takes out the autotransformer from the circuit and puts the motor to full line voltage. Autotransformer starting has several advantages viz low power loss, low starting current and less radiated heat. For large machines (over 25 H.P.), this method of starting is often used. This method can be used for both star and delta connected motors.

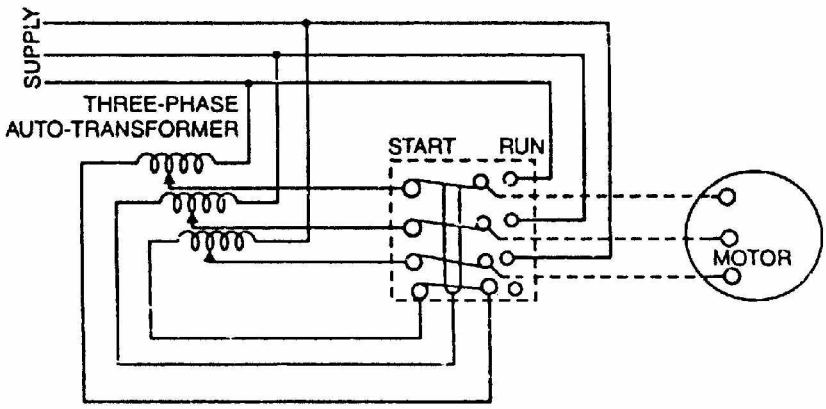

Fig.(8.31)

Relation between starting And F.L. torques. Consider a star-connected squirrel-cage induction motor. If V is the line voltage, then voltage across motor phase on direct switching is $V/\sqrt{3}$ and starting current is $I_{st} = I_{sc}$. In case of autotransformer, if a tapping of transformation ratio K (a fraction) is used, then phase voltage across motor is $KV/\sqrt{3}$ and $I_{st} = K\, I_{sc}$,

Now $$\frac{T_{st}}{T_f} = \left(\frac{I_{st}}{I_f}\right)^2 \times s_f = \left(\frac{K\, I_{sc}}{I_f}\right)^2 \times s_f = K^2\left(\frac{I_{sc}}{I_f}\right)^2 \times s_f$$

$$\therefore \quad \frac{T_{st}}{T_f} = K^2\left(\frac{I_{sc}}{I_f}\right)^2 \times s_f$$

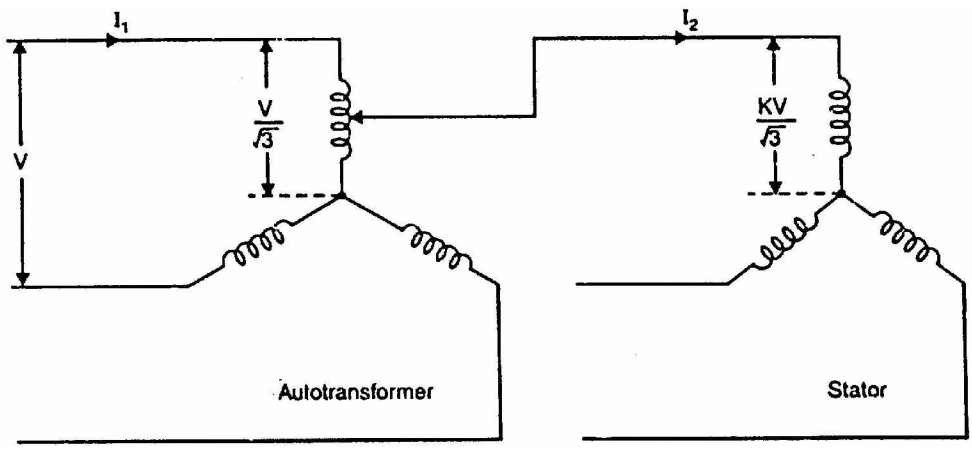

Fig.(8.32)

The current taken from the supply or by autotransformer is $I_1 = KI_2 = K^2I_{sc}$. Note that motor current is K times, the supply line current is K^2 times and the starting torque is K^2 times the value it would have been on direct-on-line starting.

(iv) Star-delta starting

The stator winding of the motor is designed for delta operation and is connected in star during the starting period. When the machine is up to speed, the connections are changed to delta. The circuit arrangement for star-delta starting is shown in Fig. (8.33).

The six leads of the stator windings are connected to the changeover switch as shown. At the instant of starting, the changeover switch is thrown to "Start" position which connects the stator windings in star. Therefore, each stator phase gets $V/\sqrt{3}$ volts where V is the line voltage. This reduces the starting current. When the motor picks up speed, the changeover switch is thrown to "Run" position which connects the stator windings in delta. Now each stator phase gets full line voltage V. The disadvantages of this method are:

(a) With star-connection during starting, stator phase voltage is $1/\sqrt{3}$ times the line voltage. Consequently, starting torque is $\left(1/\sqrt{3}\right)^2$ or 1/3 times the value it would have with Δ-connection. This is rather a large reduction in starting torque.

(b) The reduction in voltage is fixed.

This method of starting is used for medium-size machines (upto about 25 H.P.).

Relation between starting and F.L. torques. In direct delta starting,

Starting current/phase, $I_{sc} = V/Z_{sc}$ where V = line voltage

Starting line current = $\sqrt{3}\, I_{sc}$

In star starting, we have,

Starting current/phase, $I_{st} = \dfrac{V/\sqrt{3}}{Z_{sc}} = \dfrac{1}{\sqrt{3}} I_{sc}$

Now $$\frac{T_{st}}{T_f} = \left(\frac{I_{st}}{I_f}\right)^2 \times s_f = \left(\frac{I_{sc}}{\sqrt{3} \times I_f}\right)^2 \times s_f$$

or $$\frac{T_{st}}{T_f} = \frac{1}{3}\left(\frac{I_{sc}}{I_f}\right)^2 \times s_f$$

where I_{sc} = starting phase current (delta)
I_f = F.L. phase current (delta)

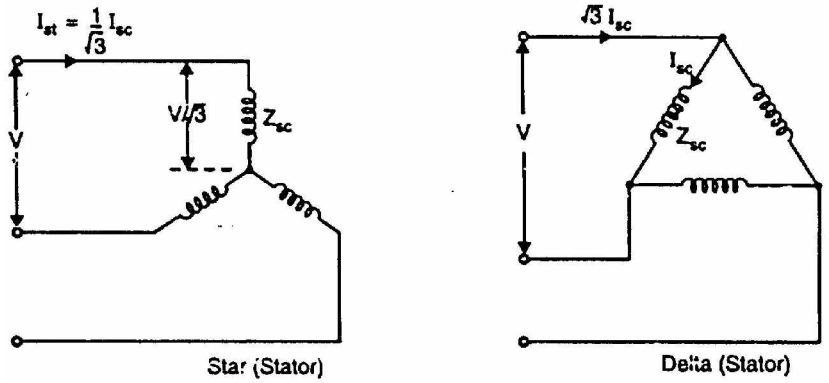

Fig.(8.33)

Note that in star-delta starting, the starting line current is reduced to one-third as compared to starting with the winding delta connected. Further, starting torque is reduced to one-third of that obtainable by direct delta starting. This method is cheap but limited to applications where high starting torque is not necessary e.g., machine tools, pumps etc.

8.37 Starting of Slip-Ring Motors

Slip-ring motors are invariably started by rotor resistance starting. In this method, a variable star-connected rheostat is connected in the rotor circuit through slip rings and full voltage is applied to the stator winding as shown in Fig. (8.34).

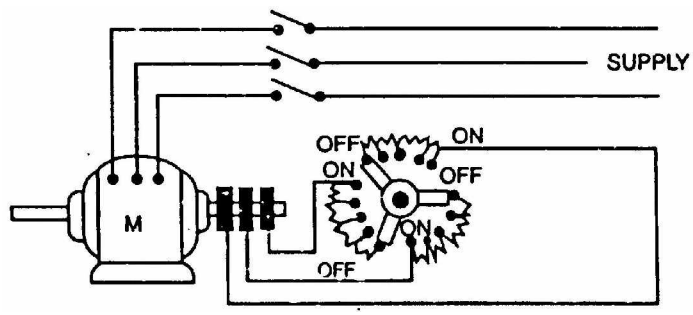

Fig.(8.34)

(i) At starting, the handle of rheostat is set in the OFF position so that maximum resistance is placed in each phase of the rotor circuit. This reduces the starting current and at the same time starting torque is increased.

(ii) As the motor picks up speed, the handle of rheostat is gradually moved in clockwise direction and cuts out the external resistance in each phase of the rotor circuit. When the motor attains normal speed, the change-over switch is in the ON position and the whole external resistance is cut out from the rotor circuit.

8.38 Slip-Ring Motors Versus Squirrel Cage Motors

The slip-ring induction motors have the following advantages over the squirrel cage motors:

(i) High starting torque with low starting current.
(ii) Smooth acceleration under heavy loads.
(iii) No abnormal heating during starting.
(iv) Good running characteristics after external rotor resistances are cut out.
(v) Adjustable speed.

The disadvantages of slip-ring motors are:

(i) The initial and maintenance costs are greater than those of squirrel cage motors.
(ii) The speed regulation is poor when run with resistance in the rotor circuit

8.39 Induction Motor Rating

The nameplate of a 3-phase induction motor provides the following information:

(i) Horsepower	(ii) Line voltage	(iii) Line current
(iv) Speed	(v) Frequency	(vi) Temperature rise

The horsepower rating is the mechanical output of the motor when it is operated at rated line voltage, rated frequency and rated speed. Under these conditions, the line current is that specified on the nameplate and the temperature rise does not exceed that specified.

The speed given on the nameplate is the actual speed of the motor at rated full-load; it is not the synchronous speed. Thus, the nameplate speed of the induction motor might be 1710 r.p.m. It is the rated full-load speed.

8.40 Double Squirrel-Cage Motors

One of the advantages of the slip-ring motor is that resistance may be inserted in the rotor circuit to obtain high starting torque (at low starting current) and then cut out to obtain optimum running conditions. However, such a procedure cannot be adopted for a squirrel cage motor because its cage is permanently short-circuited. In order to provide high starting torque at low starting current, double-cage construction is used.

Construction

As the name suggests, the rotor of this motor has two squirrel-cage windings located one above the other as shown in Fig. (8.35 (i)).

(i) **The outer winding** consists of bars of smaller cross-section short-circuited by end rings. Therefore, the resistance of this winding is high. Since the

outer winding has relatively open slots and a poorer flux path around its bars [See Fig. (8.35 (ii))], it has a low inductance. Thus the resistance of the outer squirrel-cage winding is high and its inductance is low.

(ii) **The inner winding** consists of bars of greater cross-section short-circuited by end rings. Therefore, the resistance of this winding is low. Since the bars of the inner winding are thoroughly buried in iron, it has a high inductance [See Fig. (8.35 (ii))]. Thus the resistance of the inner squirrel-cage winding is low and its inductance is high.

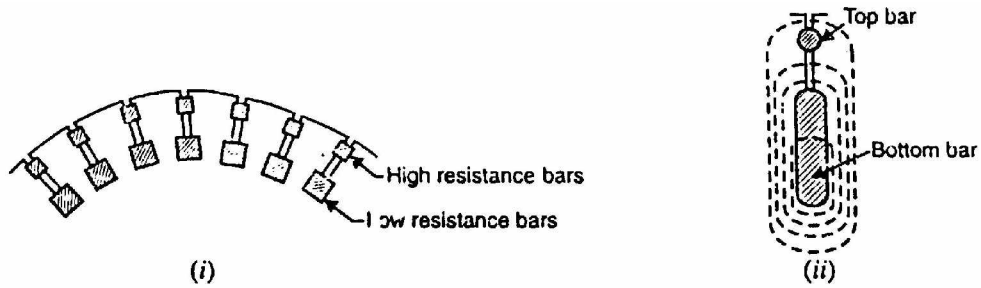

Fig.(8.35)

Working

When a rotating magnetic field sweeps across the two windings, equal e.m.f.s are induced in each.

(i) At starting, the rotor frequency is the same as that of the line (i.e., 50 Hz), making the reactance of the lower winding much higher than that of the upper winding. Because of the high reactance of the lower winding, nearly all the rotor current flows in the high-resistance outer cage winding. This provides the good starting characteristics of a high-resistance cage winding. Thus the outer winding gives high starting torque at low starting current.

(ii) As the motor accelerates, the rotor frequency decreases, thereby lowering the reactance of the inner winding, allowing it to carry a larger proportion of the total rotor current At the normal operating speed of the motor, the rotor frequency is so low (2 to 3 Hz) that nearly all the rotor current flows in the low-resistance inner cage winding. This results in good operating efficiency and speed regulation.

Fig. (8.36) shows the operating characteristics of double squirrel-cage motor. The starting torque of this motor ranges from 200 to 250 percent of full-load torque with a starting current of 4 to 6 times the full-load value. It is classed as a high-torque, low starting current motor.

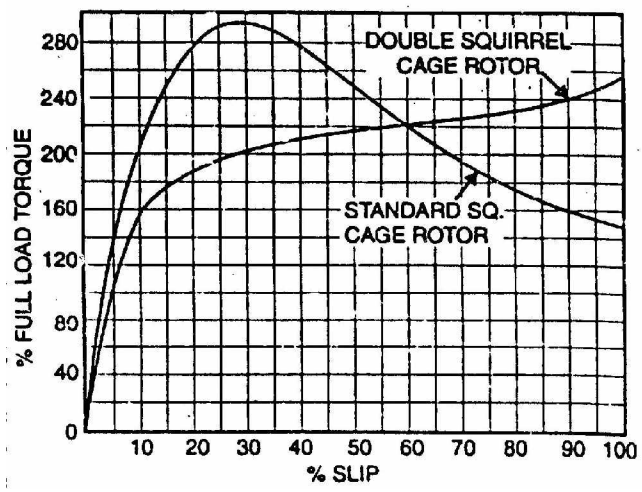

Fig.(8.36)

8.41 Equivalent Circuit of Double Squirrel-Cage Motor

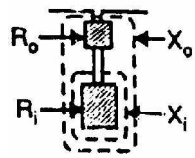

Fig.(8.37)

Fig. (8.37) shows a section of the double squirrel cage motor. Here R_o and R_i are the per phase resistances of the outer cage winding and inner cage winding whereas X_o and X_i are the corresponding per phase standstill reactances. For the outer cage, the resistance is made intentionally high, giving a high starting torque. For the inner cage winding, the resistance is low and the leakage reactance is high, giving a low starting torque but high efficiency on load. Note that in a double squirrel cage motor, the outer winding produces the high starting and accelerating torque while the inner winding provides the running torque at good efficiency.

Fig. (8.38 (i)) shows the equivalent circuit for one phase of double cage motor referred to stator. The two cage impedances are effectively in parallel. The resistances and reactances of the outer and inner rotors are referred to the stator. The exciting circuit is accounted for as in a single cage motor. If the magnetizing current (I_0) is neglected, then the circuit is simplified to that shown in Fig. (8.38 (ii)).

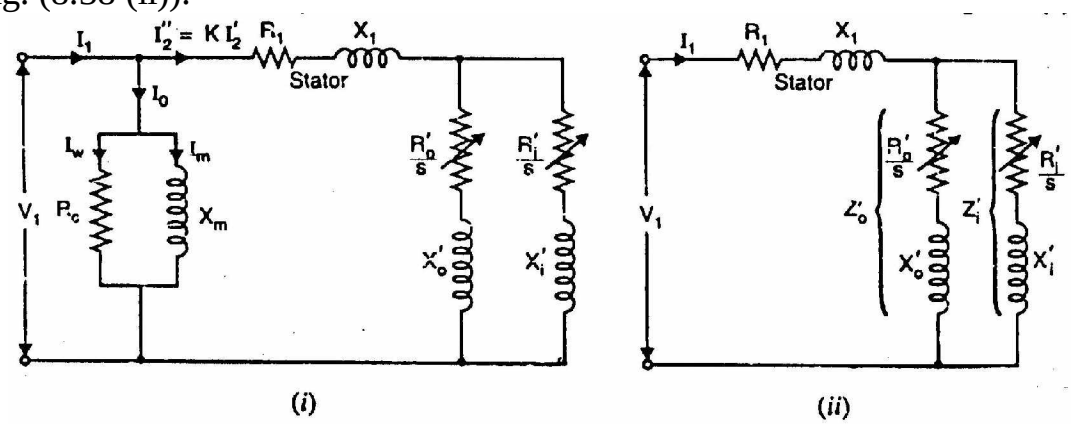

Fig.(8.38)

From the equivalent circuit, the performance of the motor can be predicted.

Total impedance as referred to stator is

$$Z_{o1} = R_1 + j\,X_1 + \frac{1}{1/Z'_i + 1/Z'_o} = R_1 + j\,X_1 + \frac{Z'_i\,Z'_o}{Z'_i + Z'_o}$$

Chapter (9)

Single-Phase Motors

Introduction

As the name suggests, these motors are used on single-phase supply. Single-phase motors are the most familiar of all electric motors because they are extensively used in home appliances, shops, offices etc. It is true that single-phase motors are less efficient substitute for 3-phase motors but 3-phase power is normally not available except in large commercial and industrial establishments. Since electric power was originally generated and distributed for lighting only, millions of homes were given single-phase supply. This led to the development of single-phase motors. Even where 3-phase mains are present, the single-phase supply may be obtained by using one of the three lines and the neutral. In this chapter, we shall focus our attention on the construction, working and characteristics of commonly used single-phase motors.

9.1 Types of Single-Phase Motors

Single-phase motors are generally built in the fractional-horsepower range and may be classified into the following four basic types:

1. Single-phase induction motors
   - (i) split-phase type
   - (ii) capacitor type
   - (iii) shaded-pole type
2. A.C. series motor or universal motor
3. Repulsion motors
   - (i) Repulsion-start induction-run motor
   - (ii) Repulsion-induction motor
4. Synchronous motors
   - (i) Reluctance motor
   - (ii) Hysteresis motor

9.2 Single-Phase Induction Motors

A single phase induction motor is very similar to a 3-phase squirrel cage induction motor. It has (i) a squirrel-cage rotor identical to a 3-phase motor and (ii) a single-phase winding on the stator.

Unlike a 3-phase induction motor, a single-phase induction motor is not self-starting but requires some starting means. The single-phase stator winding produces a magnetic field that pulsates in strength in a sinusoidal manner. The field polarity reverses after each half cycle but the field does not rotate. Consequently, the alternating flux cannot produce rotation in a stationary squirrel-cage rotor. However, if the rotor of a single-phase motor is rotated in one direction by some mechanical means, it will continue to run in the direction of rotation. As a matter of fact, the rotor quickly accelerates until it reaches a speed slightly below the synchronous speed. Once the motor is running at this speed, it will continue to rotate even though single-phase current is flowing through the stator winding. This method of starting is generally not convenient for large motors. Nor can it be employed fur a motor located at some inaccessible spot.

Fig. (9.1) shows single-phase induction motor having a squirrel cage rotor and a single-phase distributed stator winding. Such a motor inherently docs not develop any starting torque and, therefore, will not start to rotate if the stator winding is connected to single-phase a.c. supply. However, if the rotor is started by auxiliary means, the motor will quickly attain me final speed. This strange behaviour of single-phase induction motor can be explained on the basis of double-field revolving theory.

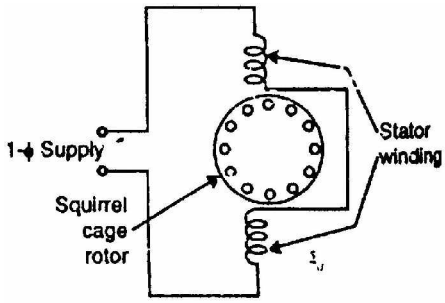

Fig.(9.1)

9.3 Double-Field Revolving Theory

The double-field revolving theory is proposed to explain this dilemma of no torque at start and yet torque once rotated. This theory is based on the fact that an alternating sinusoidal flux ($\phi = \phi_m \cos \omega t$) can be represented by two revolving fluxes, each equal to one-half of the maximum value of alternating flux (i.e., $\phi_m/2$) and each rotating at synchronous speed ($N_s = 120\ f/P$, $\omega = 2\pi f$) in opposite directions.

The above statement will now be proved. The instantaneous value of flux due to the stator current of a single-phase induction motor is given by;

$$\phi = \phi_m \cos \omega t$$

Consider two rotating magnetic fluxes ϕ_1 and ϕ_2 each of magnitude $\phi_m/2$ and rotating in opposite directions with angular velocity ω [See Fig. (9.2)]. Let the two fluxes start rotating from OX axis at

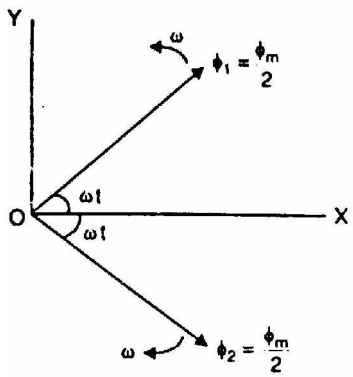

Fig.(9.2)

t = 0. After time t seconds, the angle through which the flux vectors have rotated is at. Resolving the flux vectors along-X-axis and Y-axis, we have,

$$\text{Total X-component} = \frac{\phi_m}{2}\cos\omega t + \frac{\phi_m}{2}\cos\omega t = \phi_m \cos\omega t$$

$$\text{Total Y-component} = \frac{\phi_m}{2}\sin\omega t - \frac{\phi_m}{2}\sin\omega t = 0$$

$$\text{Resultant flux, } \phi = \sqrt{(\phi_m \cos\omega t)^2 + 0^2} = \phi_m \cos\omega t$$

Thus the resultant flux vector is $\phi = \phi_m \cos \omega t$ along X-axis. Therefore, an alternating field can be replaced by two relating fields of half its amplitude rotating in opposite directions at synchronous speed. Note that the resultant vector of two revolving flux vectors is a stationary vector that oscillates in length with time along X-axis. When the rotating flux vectors are in phase [See Fig. (9.3 (i))], the resultant vector is $\phi = \phi_m$; when out of phase by 180° [See Fig. (9.3 (ii))], the resultant vector $\phi = 0$.

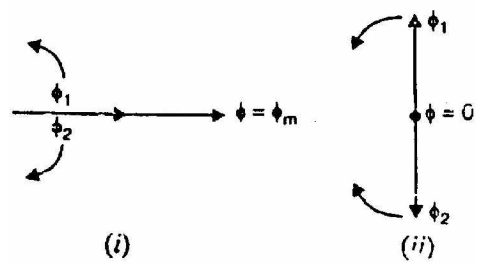

Fig.(9.3)

Let us explain the operation of single-phase induction motor by double-field revolving theory.

(i) Rotor at standstill

Consider the case that the rotor is stationary and the stator winding is connected to a single-phase supply. The alternating flux produced by the stator winding can be presented as the sum of two rotating fluxes ϕ_1 and ϕ_2, each equal to one half of the maximum value of alternating flux and each rotating at synchronous speed (N_s = 120 f/P) in opposite directions as shown in Fig. (9.4 (i)). Let the flux ϕ_1 rotate in anti clockwise direction and flux ϕ_2 in clockwise direction. The flux ϕ_1 will result in the production of torque T_1 in the anti clockwise direction and flux ϕ_2 will result in the production of torque T_2 In the clockwise direction. At standstill, these two torques are equal and opposite and the net torque developed is zero. Therefore, single-phase induction motor is not self-starting. This fact is illustrated in Fig. (9.4 (ii)).

Note that each rotating field tends to drive the rotor in the direction in which the field rotates. Thus the point of zero slip for one field corresponds to 200% slip for the other as explained later. The value of 100% slip (standstill condition) is the same for both the fields.

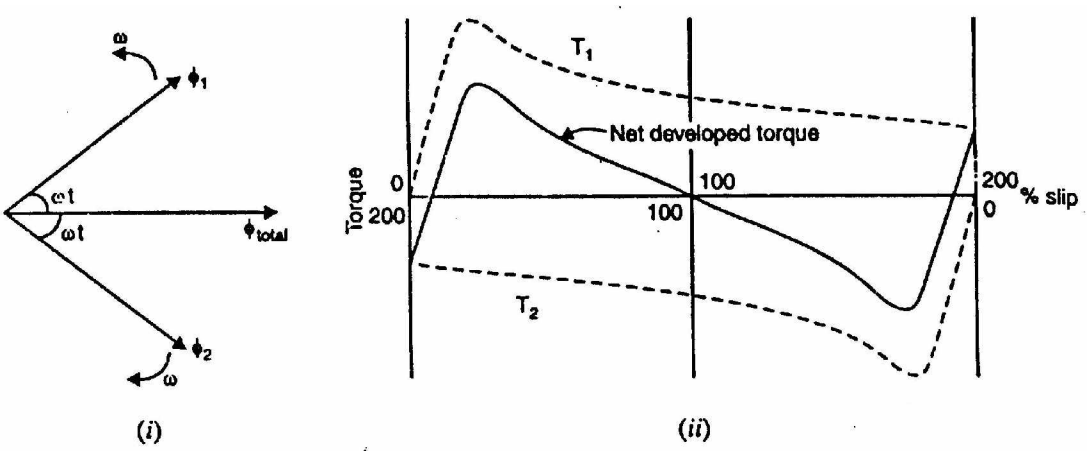

Fig.(9.4)

(ii) Rotor running

Now assume that the rotor is started by spinning the rotor or by using auxiliary circuit, in say clockwise direction. The flux rotating in the clockwise direction is the forward rotating flux (ϕ_f) and that in the other direction is the backward rotating flux (ϕ_b). The slip w.r.t. the forward flux will be

$$s_f = \frac{N_s - N}{N_s} = s$$

where N_s = synchronous speed
N = speed of rotor in the direction of forward flux

The rotor rotates opposite to the rotation of the backward flux. Therefore, the slip w.r.t. the backward flux will be

$$s_b = \frac{N_s - (-N)}{N_s} = \frac{N_s + N}{N_s} = \frac{2N_s - N_s + N}{N_s}$$

$$= \frac{2N_s}{N_s} - \frac{(N_s - N)}{N_s} = 2 - s$$

$$\therefore \quad s_b = 2 - s$$

Thus fur forward rotating flux, slip is s (less than unity) and for backward rotating flux, the slip is 2 – s (greater than unity). Since for usual rotor resistance/reactance ratios, the torques at slips of less than unity arc greater than those at slips of more than unity, the resultant torque will be in the direction of the rotation of the forward flux. Thus if the motor is once started, it will develop net torque in the direction in which it has been started and will function as a motor.

Fig. (9.5) shows the rotor circuits for the forward and backward rotating fluxes. Note that $r_2 = R_2/2$, where R_2 is the standstill rotor resistance i.e., r_2 is equal to half the standstill rotor resistance. Similarly, $x_2 = X_2/2$ where X_2 is the standstill rotor reactance. At standstill, s = 1 so that impedances of the two circuits are equal. Therefore, rotor currents are equal i.e., $I_{2f} = I_{2b}$. However, when the rotor rotates, the impedances of the two rotor circuits are unequal and the rotor current I_{2b} is higher (and also at a lower power factor) than the rotor current I_{2f}. Their m.m.f.s, which oppose the stator m.m.f.s, will result in a reduction of the backward rotating flux. Consequently, as speed increases, the forward flux increases, increasing the driving torque while the backward flux decreases, reducing the opposing torque. The motor-quickly accelerates to the final speed.

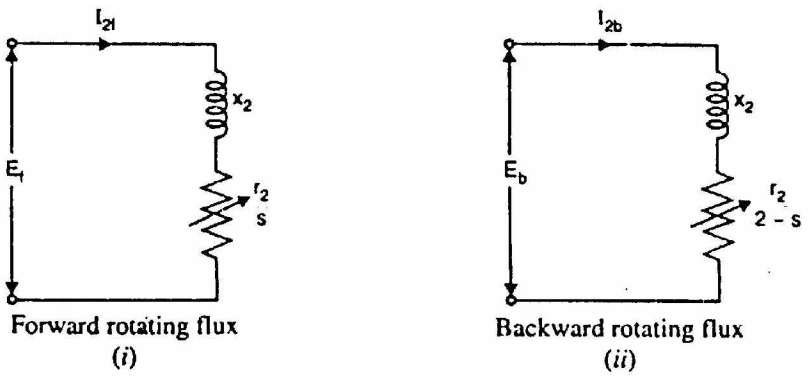

Fig.(9.5)

9.4 Making Single-Phase Induction Motor Self-Starting

The single-phase induction motor is not self-starting and it is undesirable to resort to mechanical spinning of the shaft or pulling a belt to start it. To make a single-phase induction motor self-starting, we should somehow produce a revolving stator magnetic field. This may be achieved by converting a single-phase supply into two-phase supply through the use of an additional winding. When the motor attains sufficient speed, the starting means (i.e., additional winding) may be removed depending upon the type of the motor. As a matter of fact, single-phase induction motors are classified and named according to the method employed to make them self-starting.

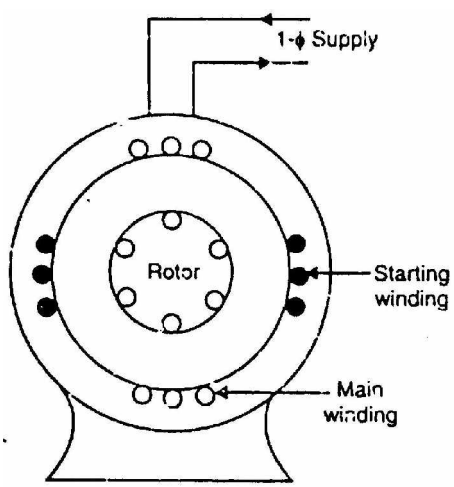

Fig.(9.6)

(i) **Split-phase motors**-started by two phase motor action through the use of an auxiliary or starting winding.

(ii) **Capacitor motors**-started by two-phase motor action through the use of an auxiliary winding and a capacitor.

(iii) **Shaded-pole motors**-started by the motion of the magnetic field produced by means of a shading coil around a portion of the pole structure.

9.5 Rotating Magnetic Field From 2-Phase Supply

As with a 3-phase supply, a 2-phase balanced supply also produces a rotating magnetic field of constant magnitude. With the exception of the shaded-pole motor, all single-phase induction motors are started as 2-phase machine. Once so started, the motor will continue to run on single-phase supply.

Let us see how 2-phase supply produces a rotating magnetic field of constant magnitude. Fig. (9.10 (i)) shows 2-pole, 2-phase winding. The phases X and Y are energized from a two-phase source and currents in these phases arc indicated as I_x and I_y [See Fig. (9.10 (ii))]. Referring to Fig. (9.10 (ii)), the fluxes produced by these currents arc given by;

$$\phi_Y = \phi_m \sin \omega t \qquad \text{and} \qquad \phi_X = \phi_m \sin(\omega t + 90°) = \phi_m \cos \omega t$$

Here ϕ_m is the maximum flux due to either phase. We shall now prove that this 2-phase supply produces a rotating magnetic field of constant magnitude equal to ϕ_m.

(i) At instant 1 [See (Fig. 9.10 (ii)) and Fig. (9.10 (iii))], the current is zero in phase Y and maximum in phase X. With the current in the direction shown, a resultant flux is established toward the right. The magnitude of the resultant flux is constant and is equal to ϕ_m as proved under:

Fig.(9.7)

At instant 1, $\omega t = 0°$ $\quad \therefore \quad \phi_Y = 0$ and $\phi_X = \phi_m$

$$\therefore \quad \text{Resultant flux, } \phi_r = \sqrt{\phi_X^2 + \phi_Y^2} = \sqrt{(\phi_m)^2 + (0)^2} = \phi_m$$

(ii) At instant 2 [See Fig. (9.10 (ii)) and Fig. (9.10 (iii))], the current is still in the same direction in phase X and an equal current flowing in phase Y. This establishes a resultant flux of the same value (i.e., $\phi_r = \phi_m$) as proved under:

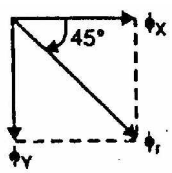

Fig.(9.8)

At instant 2, $\omega t = 45°$ $\quad \therefore \quad \phi_Y = \dfrac{\phi_m}{\sqrt{2}}$ and $\phi_X = \dfrac{\phi_m}{\sqrt{2}}$

$$\therefore \quad \text{Resultant flux, } \phi_r = \sqrt{(\phi_X)^2 + (\phi_Y)^2}$$

$$= \sqrt{\left(\frac{\phi_m}{\sqrt{2}}\right)^2 + \left(\frac{\phi_m}{\sqrt{2}}\right)^2} = \phi_m$$

Note that resultant flux has the same value (i.e. ϕ_m) but turned 45° clockwise from position 1.

(iii) At instant 3 [See Fig. (9.10 (ii)) and Fig. (9.10 (iii))], the current in phase. X has decreased to zero and current in phase Y has increased to maximum. This establishes a resultant flux downward as proved under:

Fig.(9.9)

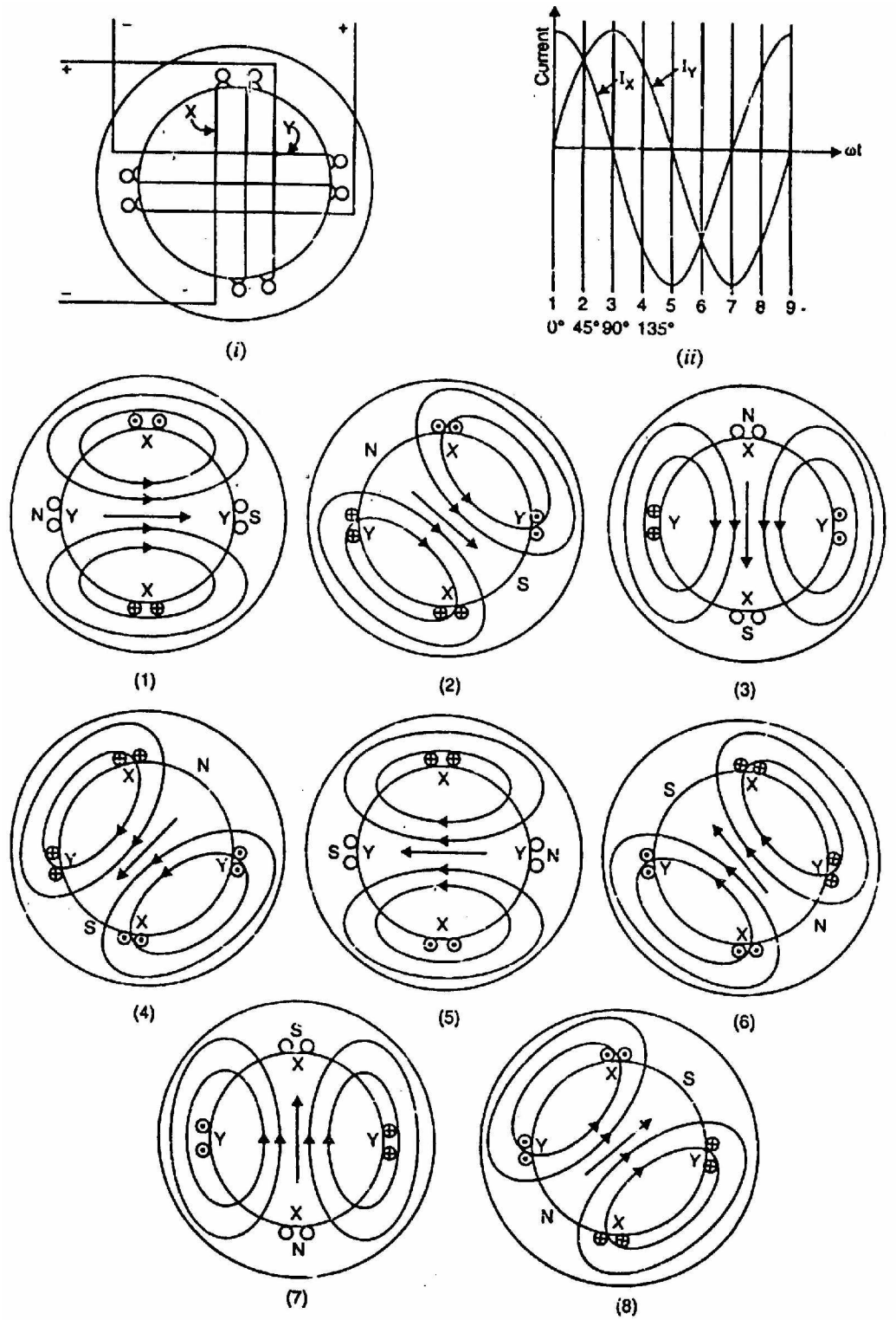

Fig.(9.10)

At instant 3, $\omega t = 90°$ $\therefore$ $\phi_Y = \phi_m$ and $\phi_X = 0$

$$\therefore \quad \phi_r = \sqrt{\phi_X^2 + (\phi_Y)^2} = \sqrt{(0)^2 + (\phi_m)^2} = \phi_m$$

Note that resultant flux has now turned 90° clockwise from position 1.
The reader may note that in the three instants considered above, the resultant flux is constant and is equal to ϕ_m. However, this constant resultant flux is shining its position (clockwise in this case). In other words, the rotating flux is produced. We shall continue to consider other instants to prove this fact.

(iv) At instant 4 [See Fig. (9.10 (ii)) and Fig. (9.10 (iii))], the current in phase X has reversed and has the same value as that of phase Y. This establishes a resultant flux equal to ϕ_m turned 45° clockwise from position 3.

At instant 4, $\omega t = 135°$ $\therefore$ $\phi_Y = \dfrac{\phi_m}{\sqrt{2}}$ and $\phi_X = \dfrac{\phi_m}{\sqrt{2}}$

$$\therefore \quad \phi_r = \sqrt{\phi_X^2 + \phi_Y^2} = \sqrt{\left(-\frac{\phi_m}{\sqrt{2}}\right)^2 + \left(\frac{\phi_m}{\sqrt{2}}\right)^2} = \phi_m$$

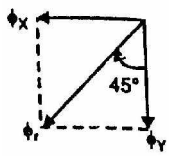

Fig.(9.11)

(v) At instant 5 [See Fig. (9.10 (ii)) and Fig. (9.10 (iii))], the current in phase X is maximum and in phase Y is zero. This establishes a resultant flux equal to ϕ_m toward left (or 90° clockwise from position 3).

At instant 5, $\omega t = 180°$ $\therefore$ $\phi_Y = 0$ and $\phi_X = -\phi_m$

$$\therefore \quad \phi_r = \sqrt{\phi_X^2 + \phi_Y^2} = \sqrt{(-\phi_m)^2 + (0)^2} = \phi_m$$

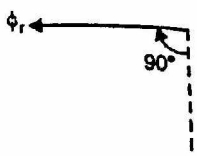

Fig.(9.12)

(vi) Diagrams 6, 7, and 8 [See Fig. (9.10 (iii))] indicate the direction of the resultant flux during the remaining successive instants.

It follows from the above discussion that a 2-phase supply produces a rotating magnetic field of constant value (= ϕ_m the maximum value of one of the fields).

Note: If the two windings arc displaced 90° electrical but produce fields that are not equal and that are not 90° apart in time, the resultant field is still rotating but is not constant in magnitude. One effect of this nonuniform rotating field is the production of a torque that is non-uniform and that, therefore, causes noisy operation of the motor. Since 2-phase operation ceases once the motor is started, the operation of the motor then becomes smooth.

9.6 Split-Phase Induction Motor

The stator of a split-phase induction motor is provided with an auxiliary or starting winding S in addition to the main or running winding M. The starting winding is located 90° electrical from the main winding [See Fig. (9.13 (i))] and operates only during the brief period when the motor starts up. The two windings are so resigned that the starting winding S has a high resistance and relatively small reactance while the main winding M has relatively low resistance and large reactance as shown in the schematic connections in Fig. (9.13 (ii)). Consequently, the currents flowing in the two windings have reasonable phase difference c (25° to 30°) as shown in the phasor diagram in Fig. (9.13 (iii)).

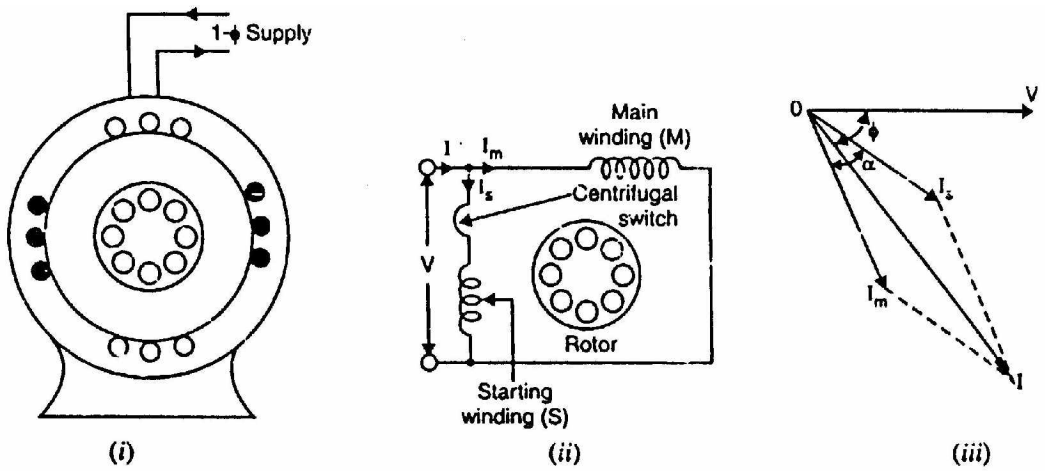

Fig.(9.13)

Operation

(i) When the two stator windings are energized from a single-phase supply, the main winding carries current I_m while the starting winding carries current I_s.

(ii) Since main winding is made highly inductive while the starting winding highly resistive, the currents I_m and I_s have a reasonable phase angle a (25° to 30°) between them as shown in Fig. (9.13 (iii)). Consequently, a weak revolving field approximating to that of a 2-phase machine is produced which starts the motor. The starting torque is given by;

$$T_s = kI_m I_s \sin\alpha$$

where k is a constant whose magnitude depends upon the design of the motor.

(iii) When the motor reaches about 75% of synchronous speed, the centrifugal switch opens the circuit of the starting winding. The motor then operates as a single-phase induction motor and continues to accelerate till it reaches the

normal speed. The normal speed of the motor is below the synchronous speed and depends upon the load on the motor.

Characteristics

(i) The sinning torque is 15 to 2 times the full-loud torque mid (lie starting current is 6 to 8 times the full-load current.

(ii) Due to their low cost, split-phase induction motors are most popular single-phase motors in the market.

(iii) Since the starting winding is made of fine wire, the current density is high and the winding heats up quickly. If the starting period exceeds 5 seconds, the winding may burn out unless the motor is protected by built-in-thermal relay. This motor is, therefore, suitable where starting periods are not frequent.

(iv) An important characteristic of these motors is that they are essentially constant-speed motors. The speed variation is 2-5% from no-load to full-load.

(v) These motors are suitable where a moderate starting torque is required and where starting periods are infrequent e.g., to drive:

(a) fans (b) washing machines (c) oil burners (d) small machine tools etc.

The power rating of such motors generally lies between 60 W and 250 W.

9.7 Capacitor-Start Motor

The capacitor-start motor is identical to a split-phase motor except that the starting winding has as many turns as the main winding. Moreover, a capacitor C is connected in series with the starting winding as shown in Fig. (9.14 (i)). The value of capacitor is so chosen that I_s leads I_m by about 80° (i.e., $\alpha \simeq 80°$) which is considerably greater than 25° found in split-phase motor [See Fig. (9.14 (ii))]. Consequently, starting torque ($T_s = k\ I_m\ I_s \sin \alpha$) is much more than that of a split-phase motor Again, the starting winding is opened by the centrifugal switch when the motor attains about 75% of synchronous speed. The motor then operates as a single-phase induction motor and continues to accelerate till it reaches the normal speed.

Characteristics

(i) Although starting characteristics of a capacitor-start motor are better than those of a split-phase motor, both machines possess the same running characteristics because the main windings are identical.

(ii) The phase angle between the two currents is about 80° compared to about 25° in a split-phase motor. Consequently, for the same starting torque, the current in the starting winding is only about half that in a split-phase motor. Therefore, the starting winding of a capacitor start motor heats up less

quickly and is well suited to applications involving either frequent or prolonged starting periods.

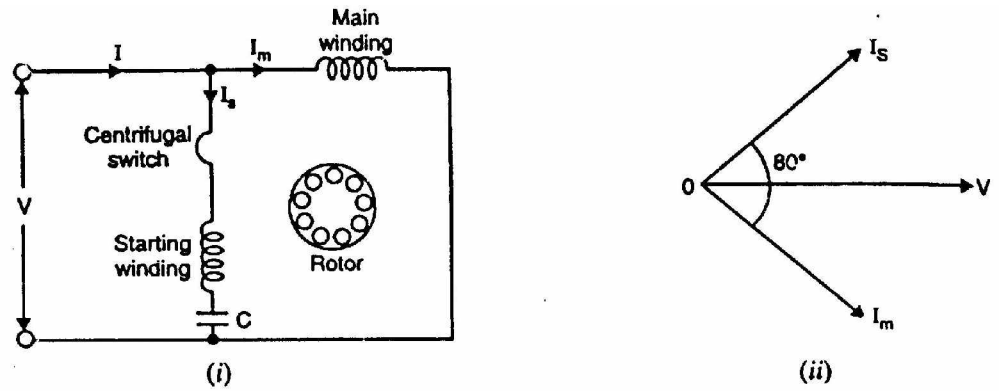

Fig.(9.14)

(iii) Capacitor-start motors are used where high starting torque is required and where the starting period may be long e.g., to drive:
(a) compressors (b) large fans (c) pumps (d) high inertia loads

The power rating of such motors lies between 120 W and 7-5 kW.

9.8 Capacitor-Start Capacitor-Run Motor

This motor is identical to a capacitor-start motor except that starting winding is not opened after starting so that both the windings remain connected to the supply when running as well as at starting. Two designs are generally used.

(i) In one design, a single capacitor C is used for both starting and running as shown in Fig.(9.15 (i)). This design eliminates the need of a centrifugal switch and at the same time improves the power factor and efficiency of the motor.

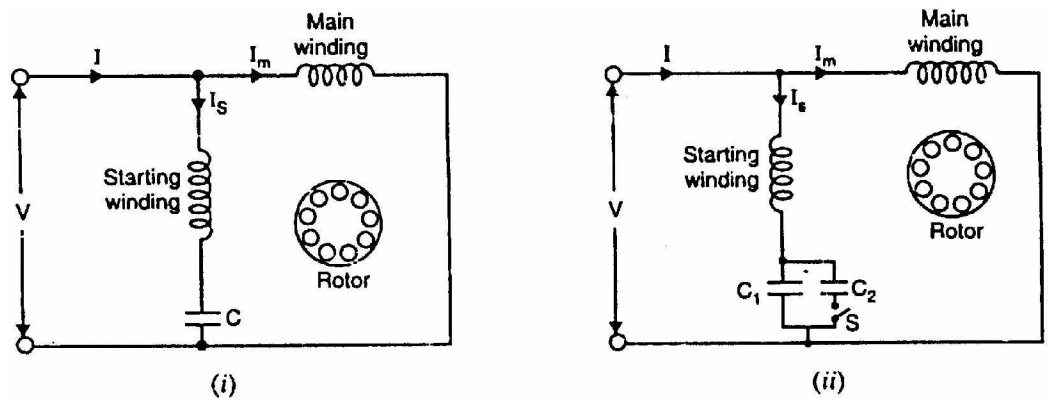

Fig.(9.15)

(ii) In the other design, two capacitors C_1 and C_2 are used in the starting winding as shown in Fig. (9.15 (ii)). The smaller capacitor C_1 required for optimum running conditions is permanently connected in series with the

starting winding. The much larger capacitor C_2 is connected in parallel with C_1 for optimum starting and remains in the circuit during starting. The starting capacitor C_1 is disconnected when the motor approaches about 75% of synchronous speed. The motor then runs as a single-phase induction motor.

Characteristics

(i) The starting winding and the capacitor can be designed for perfect 2-phase operation at any load. The motor then produces a constant torque and not a pulsating torque as in other single-phase motors.

(ii) Because of constant torque, the motor is vibration free and can be used in:
(a) hospitals (6) studios and (c) other places where silence is important.

9.9 Shaded-Pole Motor

The shaded-pole motor is very popular for ratings below 0.05 H.P. ($\simeq$ 40 W) because of its extremely simple construction. It has salient poles on the stator excited by single-phase supply and a squirrel-cage rotor as shown in Fig. (9.16). A portion of each pole is surrounded by a short-circuited turn of copper strip called shading coil.

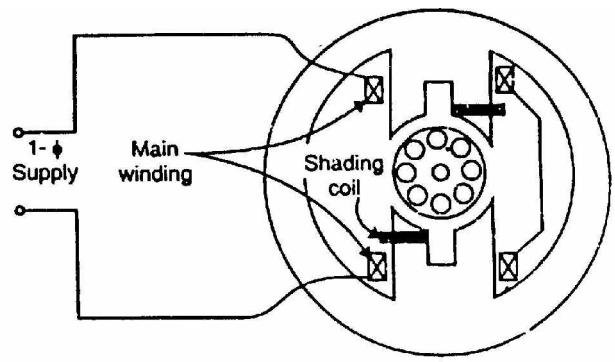

Fig.(9.16)

Operation

The operation of the motor can be understood by referring to Fig. (9.17) which shows one pole of the motor with a shading coil.

(i) During the portion OA of the alternating-current cycle [See Fig. (9.17)], the flux begins to increase and an e.m.f. is induced in the shading coil. The resulting current in the shading coil will be in such a direction (Lenz's law) so as to oppose the change in flux. Thus the flux in the shaded portion of the pole is weakened while that in the unshaded portion is strengthened as shown in Fig. (9.17 (ii)).

(ii) During the portion AB of the alternating-current cycle, the flux has reached almost maximum value and is not changing. Consequently, the flux distribution across the pole is uniform [See Fig. (9.17 (iii))] since no current is flowing in the shading coil. As the flux decreases (portion BC of the alternating current cycle), current is induced in the shading coil so as to oppose the decrease in current. Thus the flux in the shaded portion of the

pole is strengthened while that in the unshaded portion is weakened as shown in Fig. (9.17 (iv)).

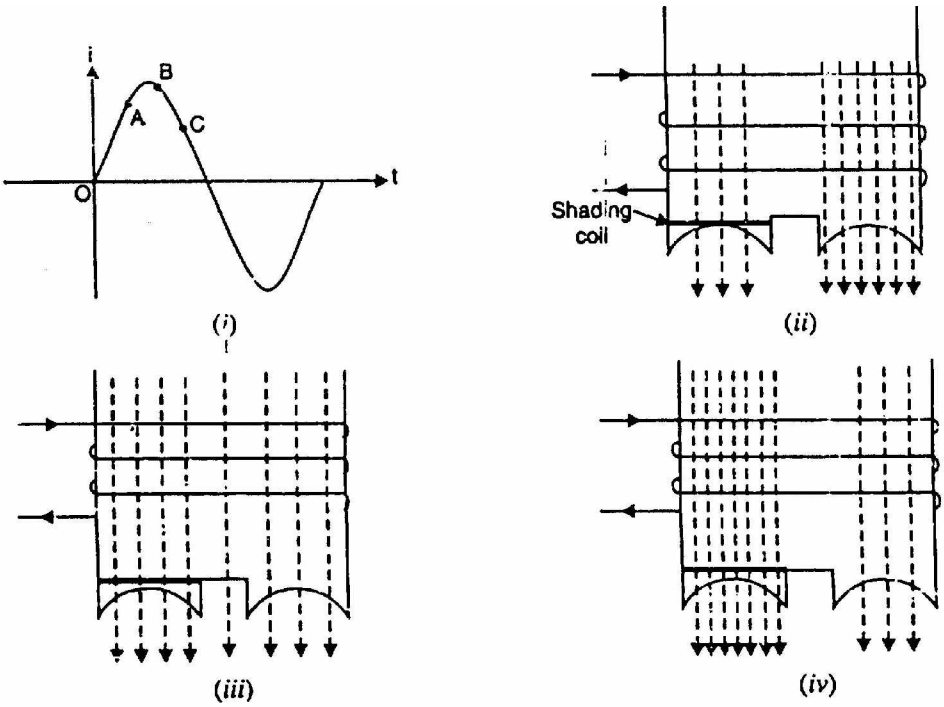

Fig.(9.17)

(iii) The effect of the shading coil is to cause the field flux to shift across the pole face from the unshaded to the shaded portion. This shifting flux is like a rotating weak field moving in the direction from unshaded portion to the shaded portion of the pole.

(iv) The rotor is of the squirrel-cage type and is under the influence of this moving field. Consequently, a small starting torque is developed. As soon as this torque starts to revolve the rotor, additional torque is produced by single-phase induction-motor action. The motor accelerates to a speed slightly below the synchronous speed and runs as a single-phase induction motor.

Characteristics

(i) The salient features of this motor are extremely simple construction and absence of centrifugal switch.

(ii) Since starting torque, efficiency and power factor are very low, these motors are only suitable for low power applications e.g., to drive:
(a) small fans (6) toys (c) hair driers (d) desk fans etc.

The power rating of such motors is upto about 30 W.

9.10 Equivalent Circuit of Single-Phase Induction Motor

It was stated earlier that when the stator of a single-phase induction motor is con heeled to single-phase supply, the stator current produces a pulsating flux that is equivalent to two-constant-amplitude fluxes revolving in opposite directions at the synchronous speed (double-field revolving theory). Each of these fluxes induces currents in the rotor circuit and produces induction motor action similar to that in a 3-phase induction motor Therefore, a single-phase induction motor can to imagined to be consisting of two motors, having a common stator winding but with their respective rotors revolving in opposite directions. Each rotor has resistance and reactance half the actual rotor values.

Let R_1 = resistance of stator winding
X_1 = leakage reactance of stator winding
X_m = total magnetizing reactance
R'_2 = resistance of the rotor referred to the stator
X'_2 = leakage reactance of the rotor referred to the stator

revolving theory.

(i) **At standstill**. At standstill, the motor is simply a transformer with its secondary short-circuited. Therefore, the equivalent circuit of single-phase motor at standstill will be as shown in Fig. (9.18). The double-field revolving theory suggests that characteristics associated with each revolving field will be just one-half of the characteristics associated with the actual total flux. Therefore, each rotor has resistance and reactance equal to $R'_2/2$ and $X'_2/2$ respectively. Each rotor is associated with half the

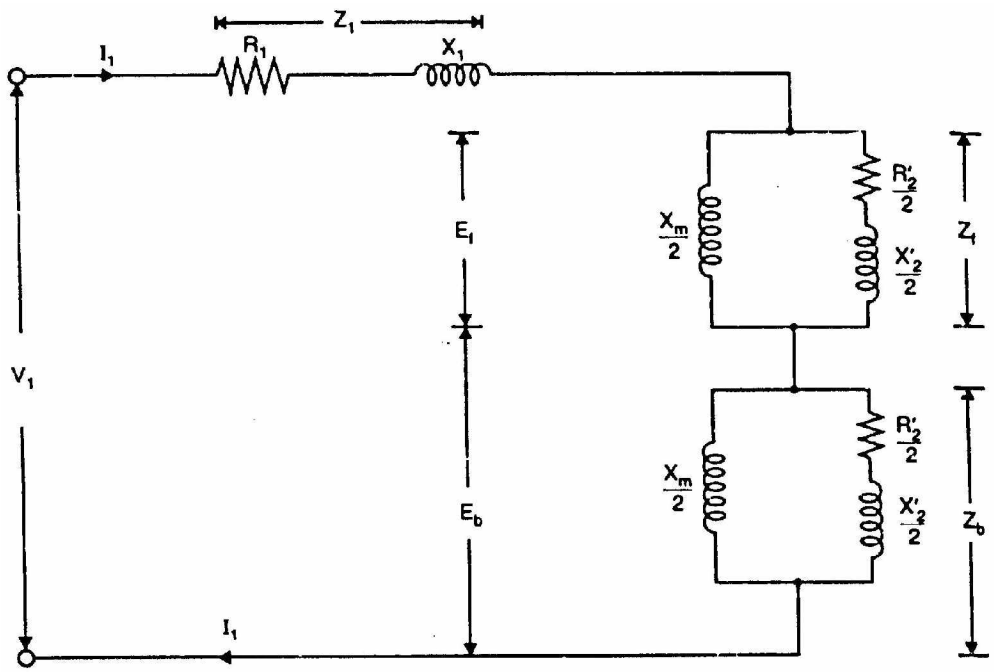

Fig.(9.18)

total magnetizing reactance. Note that in the equivalent circuit, the core loss has been neglected. However, core loss can be represented by an equivalent resistance in parallel with the magnetizing reactance.

Now $E_f = 4.44\ f\ N\ \phi_f$; $E_b = 4.44\ f\ N\ \phi_b$

At standstill, $\phi_f = \phi_b$. Therefore, $E_f = E_b$.

$$V_1 \simeq E_f + E_b = I_1 Z_f + I_1 Z_b$$

where Z_f = impedance of forward parallel branch
Z_b = impedance of backward parallel branch

(ii) **Rotor running**. Now consider that the motor is pinning at some speed in the direction of the forward revolving field, the slip being s. The rotor current produced by the forward field will have a frequency sf where f is the stator frequency. Also, the rotor current produced by the backward field will have a frequency of (2 – s)f. Fig. (9.19) shows the equivalent circuit of a single-phase induction motor when the rotor is rotating at slip s. It is clear, from the equivalent circuit that under running conditions, E_f becomes much greater than E_b because the term $R'_2/2s$ increases very much as s tends towards zero. Conversely, E^ falls because the term $R'_2/2(2 - s)$ decreases since (2 – s) tends toward 2. Consequently, the forward field increases, increasing the driving torque while the backward field decreases reducing the opposing torque.

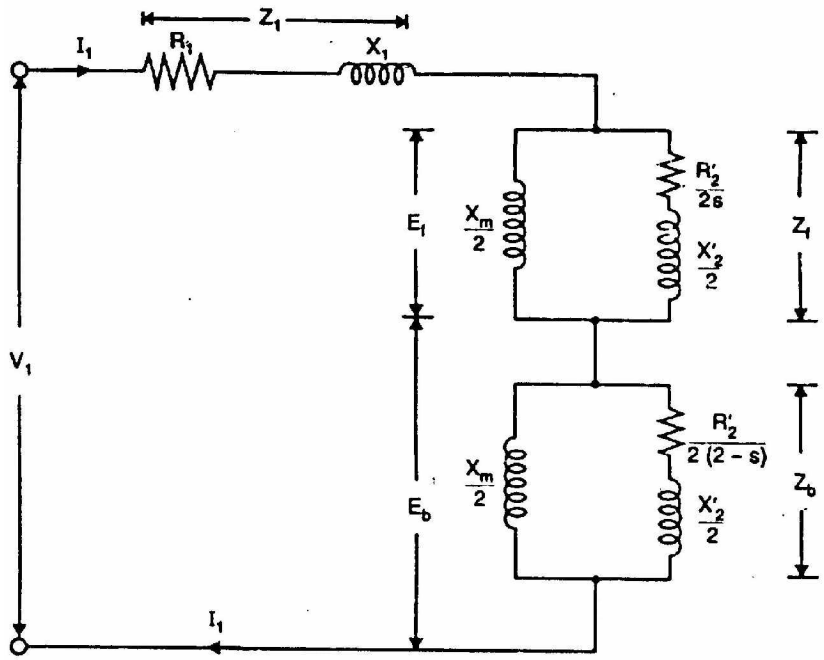

Fig.(9.19)

Total impedance of the circuit .is given by;

$$Z_r = Z_1 + Z_f + Z_b$$

where $$Z_1 = R_1 + j\,X_1$$

$$Z_f = \frac{j\frac{X_m}{2}\left(\frac{R'_2}{2s} + j\frac{X'_2}{2}\right)}{\frac{R'_2}{2s} + j\left(\frac{X_m}{2} + \frac{X'_2}{2}\right)}$$

$$Z_b = \frac{j\frac{X_m}{2}\left(\frac{R'_2}{2(2-s)} + j\frac{X'_2}{2}\right)}{\frac{R'_2}{2(2-s)} + j\left(\frac{X_m}{2} + \frac{X'_2}{2}\right)}$$

$$\therefore \quad I_1 = V_1 / Z_r$$

9.11 A.C. Series Motor or Universal Motor

A d.c. series motor will rotate in the same direction regardless of the polarity of the supply. One can expect that a d.c. series motor would also operate on a single-phase supply. It is then called an a.c. series motor. However, some changes must be made in a d.c. motor that is to operate satisfactorily on a.c. supply. The changes effected are:

(i) The entire magnetic circuit is laminated in order to reduce the eddy current loss. Hence an a.c. series motor requires a more expensive construction than a d.c. series motor.

(ii) The series field winding uses as few turns as possible to reduce the reactance of the field winding to a minimum. This reduces the voltage drop across the field winding.

(iii) A high field flux is obtained by using a low-reluctance magnetic circuit.

(iv) There is considerable sparking between the brushes and the commutator when the motor is used on a.c. supply. It is because the alternating flux establishes high currents in the coils short-circuited by the brushes. When the short-circuited coils break contact from the commutator, excessive sparking is produced. This can be eliminated by using high-resistance leads to connect the coils to the commutator segments.

Construction

The construction of en a.c. series motor is very similar to a d.c. series motor except that above modifications are incorporated [See Fig. (9.20)]. Such a motor can be operated either on a.c. or d.c. supply and the resulting torque-speed curve is about the same in each case. For this reason, it is sometimes called a universal motor.

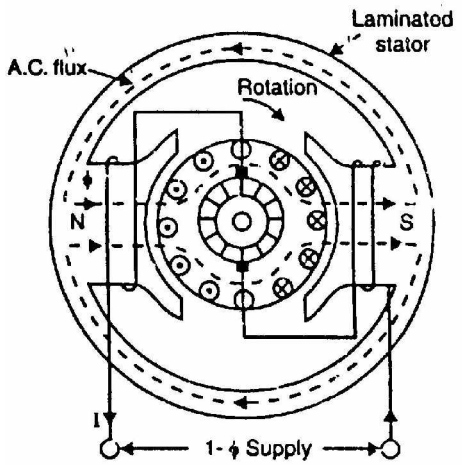

Fig.(9.20)

Operation

When the motor is connected to an a.c. supply, the same alternating current flows through the field and armature windings. The field winding produces an alternating flux ϕ that reacts with the current flowing in the armature to produce a torque. Since both armature current and flux reverse simultaneously, the torque always acts in the same direction. It may be noted that no rotating flux is produced in this type of machines; the principle of operation is the same as that of a d.c. series motor.

Characteristics

The operating characteristics of an a.c. series motor are similar to those of a d.c. series motor.

(i) The speed increases to a high value with a decrease in load. In very small series motors, the losses are usually large enough at no load that limit the speed to a definite value (1500 - 15,000 r.p.m.).

(ii) The motor torque is high for large armature currents, thus giving a high starting torque.

(iii) At full-load, the power factor is about 90%. However, at starting or when carrying an overload, the power factor is lower.

Applications

The fractional horsepower a.c. series motors have high-speed (and corresponding small size) and large starting torque. They can, therefore, be used to drive:

(a) high-speed vacuum cleaners
(b) sewing machines
(c) electric shavers
(d) drills
(e) machine tools etc.

9.12 Single-Phase Repulsion Motor

A repulsion motor is similar to an a.c. series motor except that:

(i) brushes are not connected to supply but are short-circuited [See Fig. (9.21)]. Consequently, currents are induced in the armature conductors by transformer action.
(ii) the field structure has non-salient pole construction.

By adjusting the position of short-circuited brushes on the commutator, the starting torque can be developed in the motor.

Construction

The field of stator winding is wound like the main winding of a split-phase motor and is connected directly to a single-phase source. The armature or rotor is similar to a d.c. motor armature with drum type winding connected to a commutator (not shown in the figure). However, the brushes are not connected to supply but are connected to each other or short-circuited. Short-circuiting the brushes effectively makes the rotor into a type of squirrel cage. The major difficulty with an ordinary single-phase induction motor is the low starting torque. By using a commutator motor with brushes short-circuited, it is possible to vary the starting torque by changing the brush axis. It has also better power factor than the conventional single-phase motor.

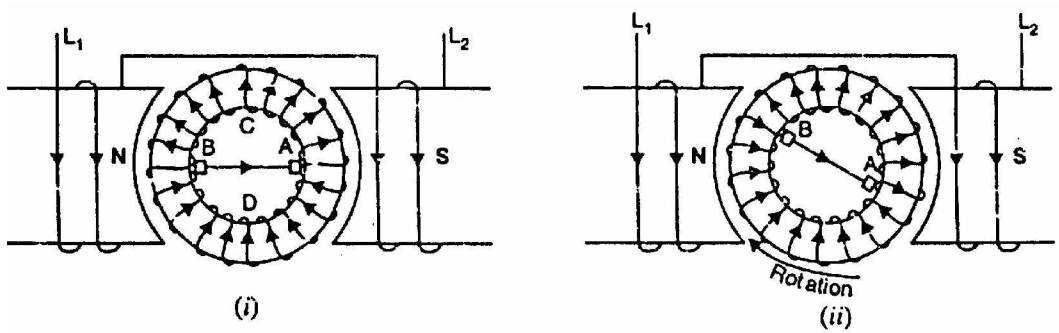

Fig.(9.21)

Principle of operation

The principle of operation is illustrated in Fig. (9.21) which shows a two-pole repulsion motor with its two short-circuited brushes. The two drawings of Fig. (9.21) represent a time at which the field current is increasing in the direction shown so that the left-hand pole is N-pole and the right-hand pole is S-pole at the instant shown.

(i) In Fig. (9.21 (i)), the brush axis is parallel to the stator field. When the stator winding is energized from single-phase supply, e.m.f. is induced in the armature conductors (rotor) by induction. By Lenz's law, the direction of the e.m.f. is such that the magnetic effect of the resulting armature currents will oppose the increase in flux. The direction of current in armature conductors will be as shown in Fig. (9.21 (i)). With the brush axis in the position shown in Fig. (9.21 (i)), current will flow from brush B to

brush A where it enters the armature and flows back to brush B through the two paths ACB and ADB. With brushes set in this position, half of the armature conductors under the N-pole carry current inward and half carry current outward. The same is true under S-pole. Therefore, as much torque is developed in one direction as in the other and the armature remains stationary. The armature will also remain stationary if the brush axis is perpendicular to the stator field axis. It is because even then net torque is zero.

(ii) If the brush axis is at some angle other than 0° or 90° to the axis of the stator field, a net torque is developed on the rotor and the rotor accelerates to its final speed. Fig. (9.21 (ii)) represents the motor at the same instant as that in Fig. (9.21 (i)) but the brushes have been shifted clockwise through some angle from the stator field axis. Now e.m.f. is still induced in the direction indicated in Fig. (9.21 (i)) and current flows through the two paths of the armature winding from brush A to brush B. However, because of the new brush positions, the greater part of the conductors under the N-pole carry current in one direction while the greater part of conductors under S-pole carry current in the opposite direction. With brushes in the position shown in Fig. (9.21 (ii), torque is developed in the clockwise direction and the rotor quickly attains the final speed.

(iii) The direction of rotation of the rotor depends upon the direction in which the brushes are shifted. If the brushes are shifted in clockwise direction from the stator field axis, the net torque acts in the clockwise direction and the rotor accelerates in the clockwise direction. If the brushes are shifted in anti-clockwise direction as in Fig. (9.22). the armature current under the pole faces is reversed and the net torque is developed in the anti-clockwise direction. Thus a repulsion motor may be made to rotate in either direction depending upon the direction in which the brushes are shifted.

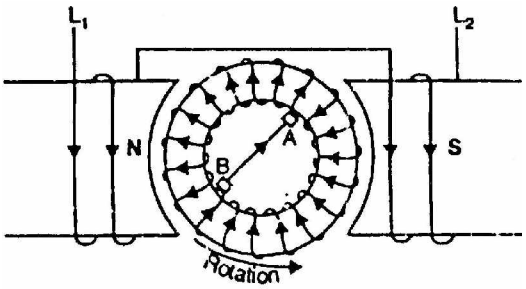

Fig.(9.22)

(iv) The total armature torque in a repulsion motor can be shown to be

$$T_a \propto \sin 2\alpha$$

where α = angle between brush axis and stator field axis

For maximum torque, $2\alpha = 90°$ or $\alpha = 45°$

Thus adjusting α to 45° at starting, maximum torque can be obtained during the starting period. However, α has to be adjusted to give a suitable running speed.

Characteristics

(i) The repulsion motor has characteristics very similar to those of an a.c. series motor i.e., it has a high starting torque and a high speed at no load.
(ii) The speed which the repulsion motor develops for any given load will depend upon the position of the brushes.
(iii) In comparison with other single-phase motors, the repulsion motor has a high starring torque and relatively low starting current.

9.13 Repulsion-Start Induction-Run Motor

Sometimes the action of a repulsion motor is combined with that of a single-phase induction motor to produce repulsion-start induction-run motor (also called repulsion-start motor). The machine is started as a repulsion motor with a corresponding high starting torque. At some predetermined speed, a centrifugal device short-circuits the commutator so that the machine then operates as a single-phase induction motor.

The repulsion-start induction-run motor has the same general construction of a repulsion motor. The only difference is that in addition to the basic repulsion-motor construction, it is equipped with a centrifugal device fitted on the armature shaft. When the motor reaches 75% of its full pinning speed, the centrifugal device forces a short-circuiting ring to come in contact with the inner surface of the commutator. This snort-circuits all the commutator bars. The rotor then resembles squirrel-cage type and the motor runs as a single-phase induction motor. At the same time, the centrifugal device raises the brushes from the commutator which reduces the wear of the brushes and commutator as well as makes the operation quiet.

Characteristics

(i) The starting torque is 2.5 to 4.5 times the full-load torque and the starting current is 3.75 times the full-load value.
(ii) Due to their high starting torque, repulsion-motors were used to operate devices such as refrigerators, pumps, compressors etc.

However, they posed a serious problem of maintenance of brushes, commutator arid the centrifugal device. Consequently, manufacturers have stopped making them in view of the development of capacitor motors which are small in size, reliable and low-priced.

9.14 Repulsion-Induction Motor

The repulsion-induction motor produces a high starting torque entirely due to repulsion motor action. When running, it functions through a combination of induction-motor and repulsion motor action.

Construction

Fig. (9.23) shows the connections of a 4-pole repulsion-induction motor for 230 V operation. It consists of a stator and a rotor (or armature).

(i) The stator carries a single distributed winding fed from single-phase supply.

(ii) The rotor is provided with two independent windings placed one inside the other. The inner winding is a squirrel-cage winding with rotor bars permanently short-circuited. Placed over the squirrel cage winding is a repulsion commutator armature winding. The repulsion winding is connected to a commutator on which ride short-circuited brushes. There is no centrifugal device and the repulsion winding functions at all times.

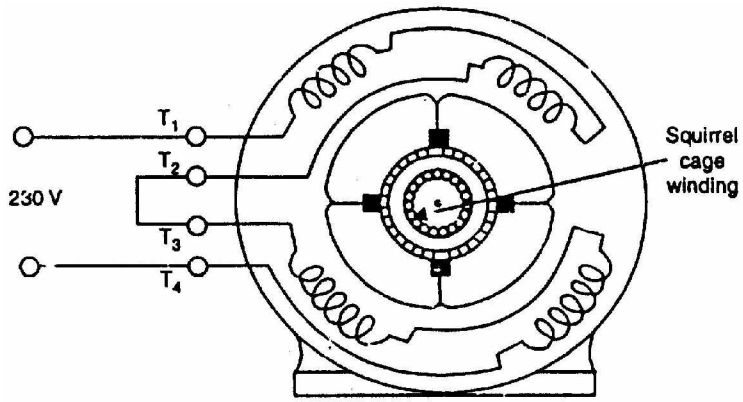

Fig.(9.23)

Operation

(i) When single-phase supply is given to the stator winding, the repulsion winding (i.e., outer winding) is active. Consequently, the motor starts as a repulsion motor with a corresponding high starting torque.

(ii) As the motor speed increases, the current shifts from the outer to inner winding due to the decreasing impedance of the inner winding with increasing speed. Consequently, at running speed, the squirrel cage winding carries the greater part of rotor current. This shifting of repulsion-motor action to induction-motor action is thus achieved without any switching arrangement.

(iii) It may be seen that the motor starts as a repulsion motor. When running, it functions through a combination of principle of induction and repulsion; the former being predominant.

Characteristics

(i) The no-load speed of a repulsion-induction motor is somewhat above the synchronous speed because of the effect of repulsion winding. However,

the speed at full-load is slightly less than the synchronous speed as in an induction motor.

(ii) The speed regulation of the motor is about 6%.

(iii) The starting torque is 2.25 to 3 times the full-load torque; the lower value being for large motors. The starting current is 3 to 4 times the full-load current.

This type of motor is used for applications requiring a high starting torque with essentially a constant running speed. The common sizes are 0.25 to 5 H.P.

9.15 Single-Phase Synchronous Motors

Very small single-phase motors have been developed which run at true synchronous speed. They do not require d.c. excitation for the rotor. Because of these characteristics, they are called unexcited single-phase synchronous motors. The most commonly used types are:

(i) Reluctance motors (ii) Hysteresis motors

The efficiency and torque-developing ability of these motors is low; The output of most of the commercial motors is only a few watts.

9.16 Reluctance Motor

It is a single-phase synchronous motor which does not require d.c. excitation to the rotor. Its operation is based upon the following principle:

Whenever a piece of ferromagnetic material is located in a magnetic field; a force is exerted on the material, tending to align the material so that reluctance of the magnetic path that passes through the material is minimum.

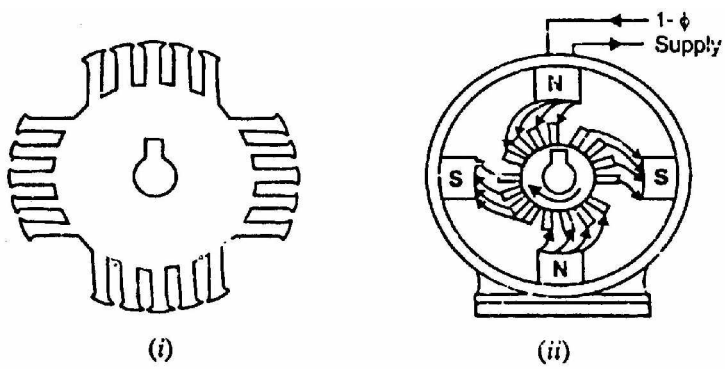

Fig.(9.24)

Construction

A reluctance motor (also called synchronous reluctance motor) consists of:

(i) **a stator** carrying a single-phase winding along with an auxiliary winding to produce a synchronous-revolving magnetic field.
(ii) **a squirrel-cage rotor** having unsymmetrical magnetic construction. This is achieved by symmetrically removing some of the teeth from the squirrel-cage rotor to produce salient poles on the rotor. As shown in Fig. (9.24 (i)), 4 sailent poles have been produced on me rotor. The salient poles created on the rotor must be equal to the poles on the stator.

Note that rotor salient poles offer low reductance to the stator flux and, therefore, become strongly magnetized.

Operation

(i) When single-phase stator having an auxiliary winding is energized, a synchronously-revolving field is produced. The motor starts as a standard squirrel-cage induction motor and will accelerate to near its synchronous speed.
(ii) As the rotor approaches synchronous speed, the rotating stator flux will exert reluctance torque on the rotor poles tending to align the salient-pole axis with the axis of the rotating field. The rotor assumes a position where its salient poles lock with the poles of the revolving field [See Fig. (9.24 (ii))]. Consequently, the motor will continue to run at the speed of revolving flux i.e., at the synchronous speed.
(iii) When we apply a mechanical load, the rotor poles fall slightly behind the stator poles, while continuing to turn at synchronous speed. As the load on the motor is increased, the mechanical angle between the poles increases progressively. Nevertheless, magnetic attraction keeps the rotor locked to the rotating flux. If the load is increased beyond the amount under which the reluctance torque can maintain synchronous speed, the rotor drops out of step with the revolving field. The speed, then, drops to some value at which the slip is sufficient to develop the necessary torque to drive the load by induction-motor action.

Characteristics

(i) These motors have poor torque, power factor and efficiency.
(ii) These motors cannot accelerate high-inertia loads to synchronous speed.
(iii) The pull-in and pull-out torques of such motors are weak.

Despite the above drawbacks, the reluctance motor is cheaper than any other type of synchronous motor. They are widely used for constant-speed applications such as timing devices, signalling devices etc.

9.17 Hysteresis Motor

It is a single-phase motor whose operation depends upon the hysteresis effect i.e., magnetization produced in a ferromagnetic material lags behind the magnetizing force.

Construction

It consists of:

(i) **a stator** designed to produce a synchronously-revolving field from a single-phase supply. This is accomplished by using permanent-split capacitor type construction. Consequently, both the windings (i.e., starting as well as main winding) remain connected in the circuit during running operation as well as at starting. The value of capacitance is so adjusted as to result in a flux revolving at synchronous speed.

(ii) **a rotor** consisting of a smooth cylinder of magnetically hard steel, without winding or teeth.

Operation

(i) When the stator is energized from a single-phase supply, a synchronously-revolving field (assumed in anti-clockwise direction) is produced due to split-phase operation.

(ii) The revolving stator flux magnetizes the rotor. Due to hysteresis effect, the axis of magnetization of rotor will lag behind the axis of stator field by hysteresis lag angle a as shown in Fig. (9.25). Thus the rotor and stator poles are locked. If the rotor is stationary, the starting torque produced is given by:

$$T_s \propto \phi_s \phi_r \sin\alpha$$

where ϕ_s = stator flux.
ϕ_r = rotor flux.

From now onwards, the rotor accelerates to synchronous speed with a uniform torque.

(iii) After reaching synchronism, the motor continues to run at synchronous speed and adjusts its torque angle so as to develop the torque required by the load.

Characteristics

(i) A hysteresis motor can synchronize any load which it can accelerate, no matter how great the inertia. It is because the torque is uniform from standstill to synchronous speed.

(ii) Since the rotor has no teeth or salient poles or winding, a hysteresis motor is inherently quiet and produces smooth rotation of the load.

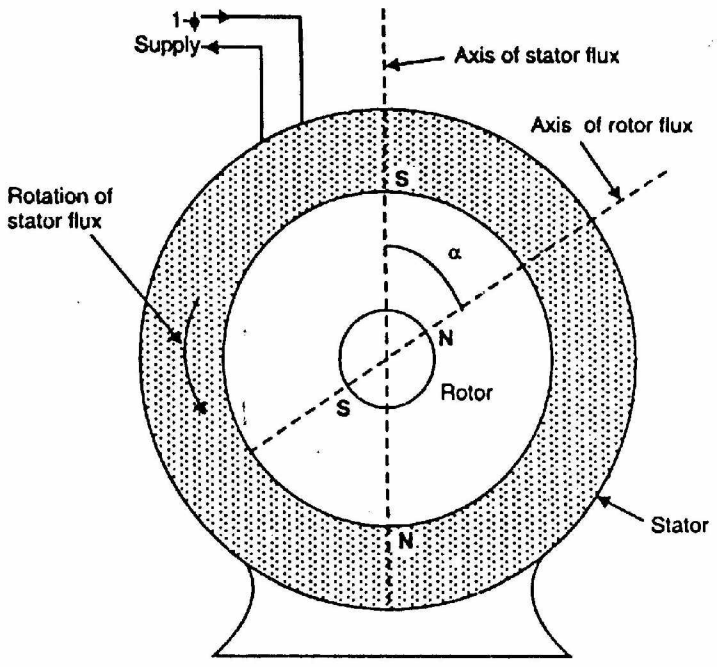

Fig.(9.25)

(iii) The rotor takes on the same number of poles as the stator field. Thus by changing the number of stator poles through pole-changing connections, we can get a set of synchronous speeds for the motor.

Applications

Due to their quiet operation and ability to drive high-inertia toads, hysteresis motors are particularly well suited for driving (i) electric clocks (ii) timing devices (iii) tape-decks (iv)from-tables and other precision audio-equipment.

Chapter (10)

Alternators

Introduction

A.C. system has a number of advantages over d.c. system. These days 3-phase a.c. system is being exclusively used for generation, transmission and distribution of power. The machine which produces 3-phase power from mechanical power is called an alternator or synchronous generator. Alternators are the primary source of all the electrical energy we consume. These machines are the largest energy converters found in the world. They convert mechanical energy into a.c. energy. In this chapter, we shall discuss the construction and characteristics of alternators.

10.1 Alternator

An alternator operates on the same fundamental principle of electromagnetic induction as a d.c. generator i.e., when the flux linking a conductor changes, an e.m.f. is induced in the conductor. Like a d.c. generator, an alternator also has an armature winding and a field winding. But there is one important difference between the two. In a d.c. generator, the armature winding is placed on the rotor in order to provide a way of converting alternating voltage generated in the winding to a direct voltage at the terminals through the use of a rotating commutator. The field poles are placed on the stationary part of the machine. Since no commutator is required in an alternator, it is usually more convenient and advantageous to place the field winding on the rotating part (i.e., rotor) and armature winding on the stationary part (i.e., stator) as shown in Fig. (10.1).

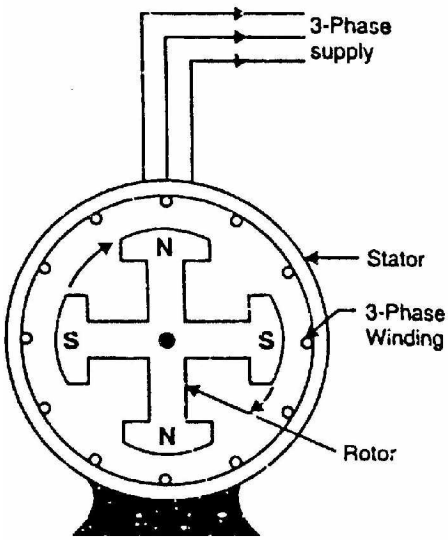

Fig.(10.1)

Advantages of stationary armature

The field winding of an alternator is placed on the rotor and is connected to d.c. supply through two slip rings. The 3-phase armature winding is placed on the stator. This arrangement has the following advantages:

(i) It is easier to insulate stationary winding for high voltages for which the alternators are usually designed. Ii is because they are not subjected to centrifugal forces and also extra space is available due to the stationary arrangement of the armature.
(ii) The stationary 3-phase armature can be directly connected to load without going through large, unreliable slip rings and brushes.
(iii) Only two slip rings are required for d.c. supply to the field winding on the rotor. Since the exciting current is small, the slip rings and brush gear required are of light construction.
(iv) Due to simple and robust construction of the rotor, higher speed of rotating d.c. field is possible. This increases the output obtainable from a machine of given dimensions.

Note: All alternators above 5 kVA employ a stationary armature (or stator) and a revolving d.c. field.

10.2 Construction of Alternator

An alternator has 3,-phase winding on the stator and a d.c. field winding on the rotor.

1. Stator

It is the stationary part of the machine and is built up of sheet-steel laminations having slots on its inner periphery. A 3-phase winding is placed in these slots and serves as the armature winding of the alternator. The armature winding is always connected in star and the neutral is connected to ground.

2. Rotor

The rotor carries a field winding which is supplied with direct current through two slip rings by a separate d.c. source. This d.c. source (called exciter) is generally a small d.c. shunt or compound generator mounted on the shaft of the alternator. Rotor construction is of two types, namely;

(i) Salient (or projecting) pole type
(ii) Non-salient (or cylindrical) pole type

(i) **Salient pole type**

In this type, salient or projecting poles are mounted on a large circular steel frame which is fixed to the shaft of the alternator as shown in Fig. (10.2). The individual field pole windings are connected in series in such a way that when the field winding is energized by the d.c. exciter, adjacent poles have opposite polarities.

Low and medium-speed alternators (120-400 r.p.m.) such as those driven by diesel engines or water turbines have salient pole type rotors due to the following reasons:

(a) The salient field poles would cause .an excessive windage loss if driven at high speed and would tend to produce noise.

(b) Salient-pole construction cannot be made strong enough to withstand the mechanical stresses to which they may be subjected at higher speeds.

Since a frequency of 50 Hz is required, we must use a large number of poles on the rotor of slow-speed alternators. Low-speed rotors always possess a large diameter to provide the necessary spate for the poles. Consequently, salient-pole type rotors have large diameters and short axial lengths.

(ii) **Non-salient pole type**

In this type, the rotor is made of smooth solid forged-steel radial cylinder having a number of slots along the outer periphery. The field windings are embedded in these slots and are connected in series to the slip rings through which they are energized by the d.c. exciter. The regions forming the poles are usually left unslotted as shown in Fig. (10.3). It is clear that the poles formed are non-salient i.e., they do not project out from the rotor surface.

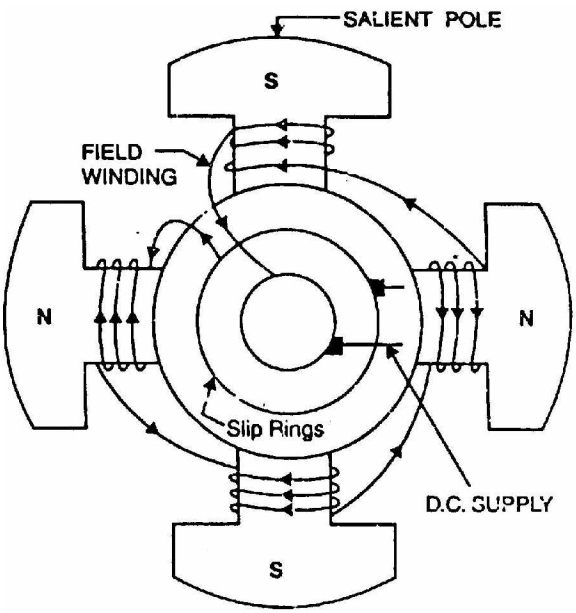

Fig.(10.2)

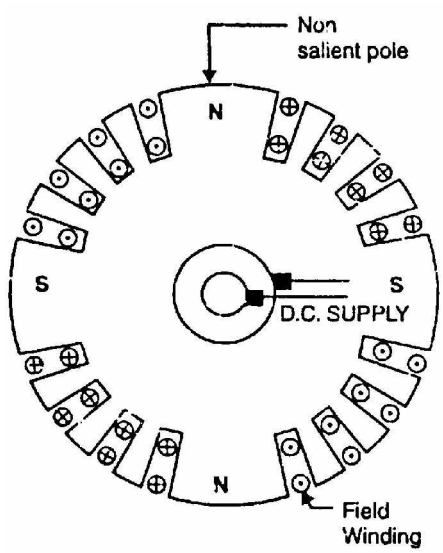

Fig.(10.3)

High-speed alternators (1500 or 3000 r.p.m.) are driven by steam turbines and use non-salient type rotors due to the following reasons:

(a) This type of construction has mechanical robustness and gives noiseless operation at high speeds.

(b) The flux distribution around the periphery is nearly a sine wave and hence a better e.m.f. waveform is obtained than in the case of salient-pole type.

Since steam turbines run at high speed and a frequency of 50 Hz is required, we need a small number of poles on the rotor of high-speed alternators (also called turboalternators). We can use not less than 2 poles and this fixes the highest possible speed. For a frequency of 50 Hz, it is 3000 r.p.m. The next lower speed is 1500 r.p.m. for a 4-pole machine. Consequently, turboalternators possess 2 or 4 poles and have small diameters and very long axial lengths.

10.3 Alternator Operation

The rotor winding is energized from the d.c. exciter and alternate N and S poles are developed on the rotor. When the rotor is rotated in anti-clockwise direction by a prime mover, the stator or armature conductors are cut by the magnetic flux of rotor poles. Consequently, e.m.f. is induced in the armature conductors due to electromagnetic induction. The induced e.m.f. is alternating since N and S poles of rotor alternately pass the armature conductors. The direction of induced e.m.f. can be found by Fleming's right hand rule and frequency is given by;

$$f = \frac{NP}{120}$$

where N = speed of rotor in r.p.m.
P = number of rotor poles

The magnitude of the voltage induced in each phase depends upon the rotor flux, the number and position of the conductors in the phase and the speed of the rotor.

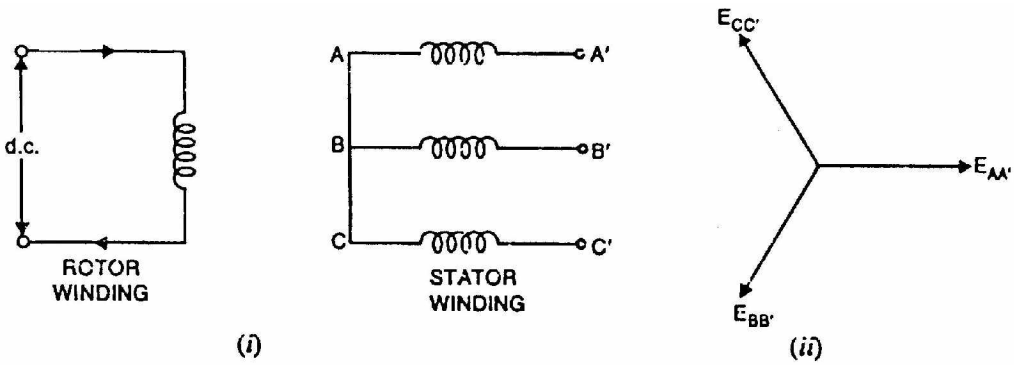

Fig.(10.4)

Fig. (10.4 (i)) shows star-connected armature winding and d.c. field winding. When the rotor is rotated, a 3-phase voltage is induced in the armature winding. The magnitude of induced e.m.f. depends upon the speed of rotation and the d.c. exciting current. The magnitude of e.m.f. in each phase of the armature winding is the same. However, they differ in phase by 120° electrical as shown in the phasor diagram in Fig. (10.4 (ii)).

10.4 Frequency

The frequency of induced e.m.f. in the armature conductors depends upon speed and the number of poles.

Let N = rotor speed in r.p.m.
P = number of rotor poles
f = frequency of e.m.f. in Hz

Consider a stator conductor that is successively swept by the N and S poles of the rotor. If a positive voltage is induced when a N-pole sweeps across the conductor, a similar negative voltage is induced when a S-pole sweeps by. This means that one complete cycle of e.m.f. is generated in the conductor as a pair of poles passes it i.e., one N-pole and the adjacent following S-pole. The same is true for every other armature conductor.

∴ No. of cycles/revolution = No. of pairs of poles = P/2
No. of revolutions/second = N/60
∴ No. of cycles/second = (P/2)(N/60) = N P/120

But number of cycles of e.m.f. per second is its frequency.

$$\therefore \quad f = \frac{NP}{120}$$

It may be noted that N is the synchronous speed and is generally represented by N_s. For a given alternator, the number of rotor poles is fixed and, therefore, the alternator must be run at synchronous speed to give an output of desired frequency. For this reason, an alternator is sometimes called synchronous generator.

10.5 A.C. Armature Windings

A.C. armature windings are always of the nonsalient-pole type and are usually symmetrically distributed in slots around the complete circumference of the armature. A.C. armature windings are generally open-circuit type i.e., both ends are brought out. An open-circuit winding is one that does not close on itself i.e., a closed circuit will not be formed until some external connection is made to a source or load. The following are the general features of a.c. armature windings:

(i) A.C. armature windings are generally distributed windings i.e., they are symmetrically distributed in slots around the complete circumference of the armature. A distributed winding has two principal advantages. First, a distributed winding generates a voltage wave that is nearly a sine curve. Secondly, copper is evenly distributed on the armature surface. Therefore, heating is more uniform and this type of winding is more easily cooled.

(ii) A.C. armature windings may use full-pitch coils or fractional-pitch coils. A coil with a span of 180° electrical is called a full-pitch coil. In this case, the two sides of the coil occupy identical positions under adjacent opposite

poles and the e.m.f. generated in the coil is maximum. A coil with a span of less than 180° electrical is called a fractional-pitch coil. For example, a coil with a span of 150° electrical would be called a 5/6 pitch coil. Although e.m.f. induced in a fractional-pitch coil is less than that of a full-pitch coil, fractional-pitch coils are frequently used in a.c. machines for two main reasons. First, less copper is required per coil and secondly the waveform of the generated voltage is improved.

(iii) Most of a.c. machines use double layer armature windings. In a double layer winding, one coil side lies in the upper half of one slot while the other coil side lies in the lower half of another slot spaced about one-pole pitch from the first one. This arrangement permits simpler end connections and it is economical to manufacture.

(iv) Since most of a.c. machines are of 3-phase type, the three windings of the three phases are identical but spaced 120 electrical degrees apart.

(v) A group of adjacent slots belonging to one phase under one pole pair is known as phase belt. The angle subtended by a phase belt is known as phase spread. The 3-phase windings are always designed for 60° phase spread.

10.6 Armature Winding of Alternator

With very few exceptions, alternators are 3-phase machines because of the advantages of 3-phase service for generation, transmission and distribution. The windings for an alternator are much simpler than that of a d c. machine because no commutator is used. Fig. (10.5) shows a 2-pole, 3-phase double-layer, full-pitch, distributed winding for the stator of an alternator. There are 12 slots and each slot contains two coil sides. The coil sides that are placed in adjacent slots belong to the same phase such as a_1, a_3 or a_2, a_4 constitute a phase belt. Note that in a 3-phase machine, phase belt is always 60° electrical. Since the winding has double-layer arrangement, one side of a coil, such as a_1, is placed at the bottom of a slot and the other side $-a_1$ is placed at the top of another slot spaced one pole pitch apart. Note that each coil has a span of a full pole pitch or 180 electrical degrees. Therefore. the winding is a full-pitch winding.

Note that there are 12 total coils and each phase has four coils. The four coils in each phase are connected in series so that their voltages aid. The three phases then may be connected to form Y or Δ-connection. Fig. (10.6) shows how the coils ire connected to form a Y-connection.

10.7 Winding Factors

The armature winding of an alternator is distributed over the entire armature. The distributed winding produces nearly a sine waveform and the heating is

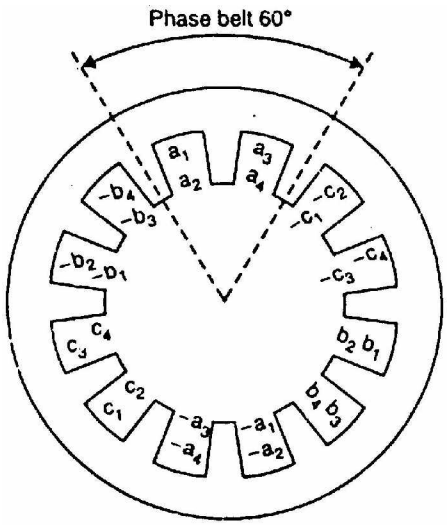

Fig.(10.5)

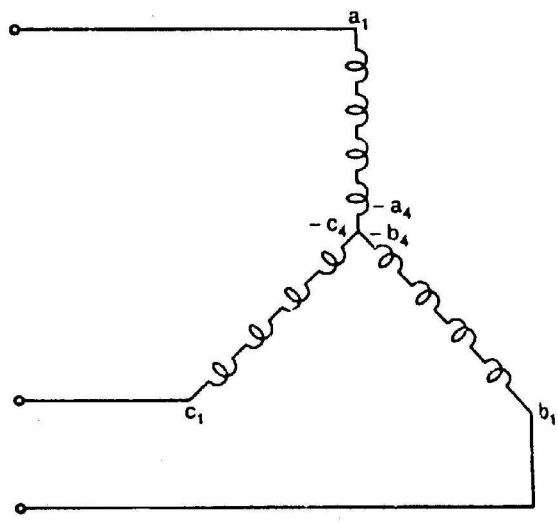

Fig.(10.6)

more uniform. Likewise, the coils of armature winding are not full-pitched i.e., the two sides of a coil are not at corresponding points under adjacent poles. The fractional pitched armature winding requires less copper per coil and at the same time waveform of output voltage is unproved. The distribution and pitching of the coils affect the voltages induced in the coils. We shall discuss two winding factors:

(i) Distribution factor (K_d), also called breadth factor
(ii) Pitch factor (K_p), also known as chord factor

(i) Distribution factor (K_d)

A winding with only one slot per pole per phase is called a concentrated winding. In this type of winding, the e.m.f. generated/phase is equal to the arithmetic sum of the individual coil e.m.f.s in that phase. However, if the coils/phase are distributed over several slots in space (distributed winding), the e.m.f.s in the coils are not in phase (i.e., phase difference is not zero) but are displaced from each by the slot angle α (The angular displacement in electrical agrees between the adjacent slots is called slot angle). The e.m.f./phase will be the phasor sum of coil e.m.f.s. The distribution factor K_d is defined as:

$$K_d = \frac{\text{e.m.f. with distributed winding}}{\text{e.m.f. with concentrated winding}}$$

$$= \frac{\text{phasor sum of coil e.m.f.s/phase}}{\text{arithmetic sum of coil e.m.f.s/phase}}$$

Note that numerator is less than denominator so that $K_d < 1$.
Expression for K_d

Let α = slot angle $= \dfrac{180° \text{ electrical}}{\text{No. of slots/pole}}$

n = slots per pole per phase

The distribution factor can be determined by constructing a phasor diagram for the coil e.m.f.s. Let n = 3. The three coil e.m.f.s are shown as phasors AB, BC and CD [See Fig. (10.7 (i))] each of which is a chord of circle with centre at O and subtends an angle α at O. The phasor sum of the coil e.m.f.s subtends an angle n α (Here n = 3) at O. Draw perpendicular bisectors of each chord such as Ox, Oy etc [See Fig. (10.7 (ii))].

$$K_d = \frac{AD}{n \times AB} = \frac{2 \times Ax}{n \times (2Ay)} = \frac{Ax}{n \times Ay}$$

$$= \frac{OA \times \sin(n\alpha/2)}{n \times OA \times \sin(\alpha/2)}$$

$$\therefore \quad K_d = \frac{\sin(n\alpha/2)}{n \sin(\alpha/2)}$$

Note that n α is the phase spread.

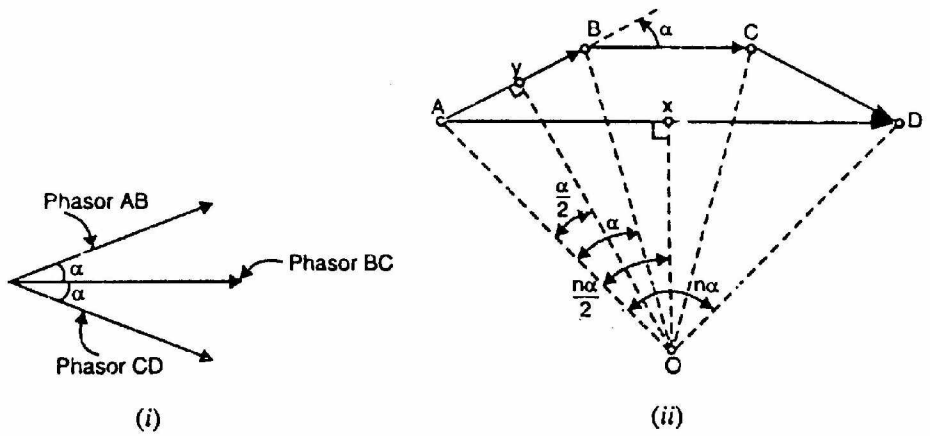

Fig.(10.7)

(ii) Pitch factor (K_p)

A coil whose sides are separated by one pole pitch (i.e., coil span is 180° electrical) is called a full-pitch coil. With a full-pitch coil, the e.m.f.s induced in the two coil sides a in phase with each other and the resultant e.m.f. is the arithmetic sum of individual e.m.fs. However the waveform of the resultant e.m.f. can be improved by making the coil pitch less than a pole pitch. Such a coil is called short-pitch coil. This practice is only possible with double-layer type of winding The e.m.f. induced in a short-pitch coil is less than that of a full-pitch coil. The factor by which e.m.f. per coil is reduced is called pitch factor K_p. It is defined as:

$$K_p = \frac{\text{e.m.f. induced in short - pitch coil}}{\text{e.m.f. induced in full - pitch coil}}$$

Expression for K_p. Consider a coil AB which is short-pitch by an angle β electrical degrees as shown in Fig. (10.8). The e.m.f.s generated in the coil sides

A and B differ in phase by an angle β and can be represented by phasors E_A and E_B respectively as shown in Fig. (10.9). The diagonal of the parallelogram represents the resultant e.m.f. E_R of the coil.

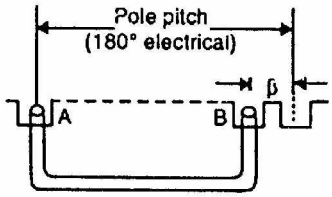

Fig.(10.8)

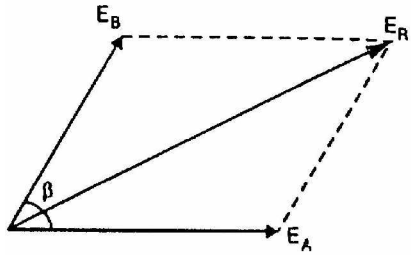

Fig.(10.9)

Since $E_A = E_B$, $E_R = 2E_a \cos \beta/2$

$$\text{Pitch factor, } K_p = \frac{\text{e.m.f. in short - pitch coil}}{\text{e.m.f. in full - pitch coil}} = \frac{2E_A \cos\beta/2}{2E_A} = \cos\beta/2$$

$$\therefore \quad K_p = \cos\beta/2$$

For a full-pitch winding, $K_p = 1$. However, for a short-pitch winding, $K_p < 1$. Note that β is always an integer multiple of the slot angle α.

10.8 E.M.F. Equation of an Alternator

Let Z = No. of conductors or coil sides in series per phase
ϕ = Flux per pole in webers
P = Number of rotor poles
N = Rotor speed in r.p.m.

In one revolution (i.e., 60/N second), each stator conductor is cut by Pϕ webers i.e.,

$$d\phi = P\phi; \qquad dt = 60/N$$

∴ Average e.m.f. induced in one stator conductor

$$= \frac{d\phi}{dt} = \frac{P\phi}{60/N} = \frac{P\phi N}{60} \text{ volts}$$

Since there are Z conductors in series per phase,

$$\therefore \text{ Average e.m.f./phase} = \frac{P\phi N}{60} \times Z$$

$$= \frac{P\phi Z}{60} \times \frac{120\,f}{P} \qquad \left(\text{n } N = \frac{120\,f}{P}\right)$$

$$= 2f\phi Z \text{ volts}$$

R.M.S. value of e.m.f./phase = Average value/phase x form factor

$$= 2f\phi\, Z \times 1.11 = 2.22\, f\phi\, Z \text{ volts}$$

$$\therefore \quad E_{r.m.s.}/\text{phase} = 2.22 f\phi Z \text{ volts} \qquad \text{(i)}$$

If K_p and K_d are the pitch factor and distribution factor of the armature winding, then,

$$E_{r.m.s.}/\text{phase} = 2.22 K_p K_d f\phi Z \text{ volts} \qquad \text{(ii)}$$

Sometimes the turns (T) per phase rather than conductors per phase are specified, in that case, eq. (ii) becomes:

$$E_{r.m.s.}/\text{phase} = 4.44 K_p K_d f\phi T \text{ volts} \qquad \text{(iii)}$$

The line voltage will depend upon whether the winding is star or delta connected.

10.9 Armature Reaction in Alternator

When an alternator is running at no-load, there will be no current flowing through the armature winding. The flux produced in the air-gap will be only due to the rotor ampere-turns. When the alternator is loaded, the three-phase currents will produce a totaling magnetic field in the air-gap. Consequently, the air-gap flux is changed from the no-load condition.

The effect of armature flux on the flux produced by field ampere-turns (i. e., rotor ampere-turns) is called armature reaction.

Two things are worth noting about the armature reaction in an alternator. First, the armature flux and the flux produced by rotor ampere-turns rotate at the same speed (synchronous speed) in the same direction and, therefore, the two fluxes are fixed in space relative to each other. Secondly, the modification of flux in the air-gap due to armature flux depends on the magnitude of stator current and on the power factor of the load. It is the load power factor which determines whether the armature flux distorts, opposes or helps the flux produced by rotor ampere-turns. To illustrate this important point, we shall consider the following three cases:

(i) When load p.f. is unity
(ii) When load p.f. is zero lagging
(iii) When load p.f. is zero leading

(i) When load p.f. is unity

Fig. (10.10 (i)) shows an elementary alternator on no-load. Since the armature is on open-circuit, there is no stator current and the flux due to rotor current is distributed symmetrically in the air-gap as shown in Fig. (10.10 (i)). Since the direction of the rotor is assumed clockwise, the generated e.m.f. in phase R_1R_2 is at its maximum and is towards the paper in the conductor R_1 and outwards in conductor R_2. No armature flux is produced since no current flows in the armature winding.

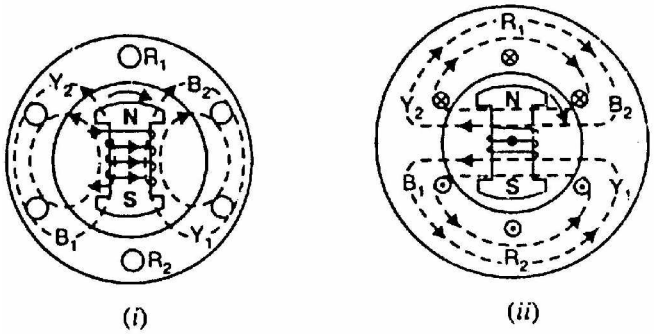

Fig.(10.10)

Fig. (10.10 (ii)) shows the effect when a resistive load (unity p.f.) is connected across the terminals of the alternator. According to right-hand rule, the current is "in" in the conductors under N-pole and "out" in the conductors under S-pole. Therefore, the armature flux is clockwise due to currents in the top conductors and anti-clockwise due to currents in the bottom conductors. Note that armature flux is at 90° to the main flux (due to rotor current) and is behind the main flux. In this case, the flux in the air-gap is distorted but not weakened. Therefore, at unity p.f., the effect of armature reaction is merely to distort the main field; there is no weakening of the main field and the average flux practically remains the same. Since the magnetic flux due to stator currents (i.e., armature flux) rotate; synchronously with the rotor, the flux distortion remains the same for all positions of the rotor.

(ii) When load p.f. is zero lagging

When a pure inductive load (zero p.f. lagging) is connected across the terminals of the alternator, current lags behind the voltage by 90°. This means that current will be maximum at zero e.m.f. and vice-versa.

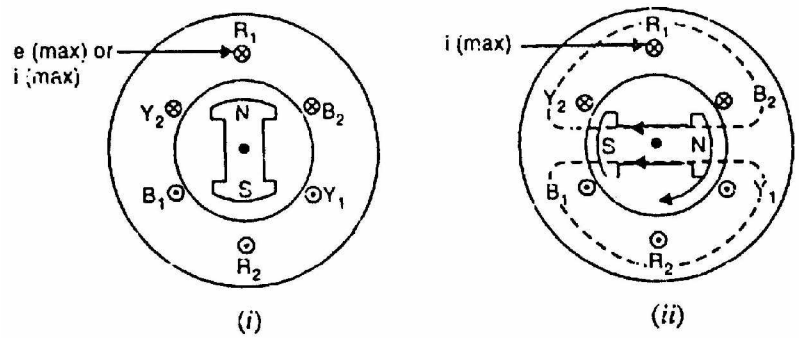

Fig.(10.11)

Fig. (10.11 (i)) shows the condition when the alternator is supplying resistive load. Note that e.m.f. as well as current in phase R_1R_2 is maximum in the position shown. When the alternator is supplying a pure inductive load, the current in phase R_1R_2 will not reach its maximum value until N-pole advanced 90° electrical as shown in Fig. (10.11 (ii)). Now the armature flux is from right

to left and field flux is from left to right All the flux produced by armature current (i.e., armature flux) opposes be field flux and, therefore, weakens it. In other words, armature reaction is directly demagnetizing. Hence at zero p.f. lagging, the armature reaction weakens the main flux. This causes a reduction in the generated e.m.f.

(iii) When load p.f. is zero leading

When a pure capacitive load (zero p.f. leading) is connected across the terminals of the alternator, the current in armature windings will lead the induced e.m.f. by 90°. Obviously, the effect of armature reaction will be the reverse that for pure inductive load. Thus armature flux now aids the main flux and the generated e.m.f. is increased.

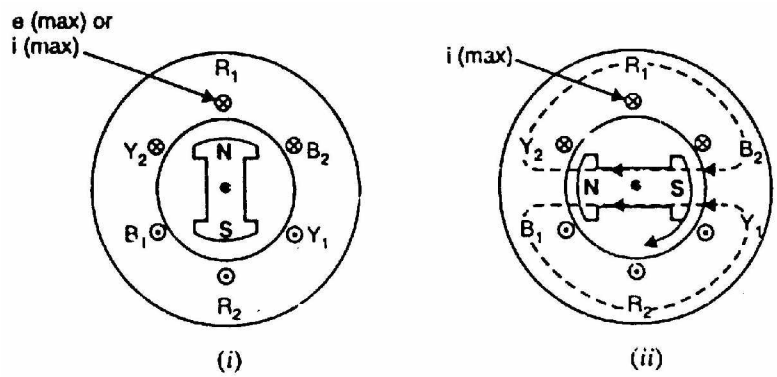

Fig.(10.12)

Fig. (10.12 (i)) shows the condition when alternator is supplying resistive load. Note that e.m.f. as well as current in phase R_1R_2 is maximum in the position shown. When the alternator is supplying a pure capacitive load, the maximum current in R_1R_2 will occur 90° electrical before the occurrence of maximum induced e.m.f. Therefore, maximum current in phase R_1R_2 will occur if the position of the rotor remains 90° behind as compared to its position under resistive load. This is illustrated in Fig. (10.12 (ii)). It is clear that armature flux is now in the same direction as the field flux and, therefore, strengthens it. This causes an increase in the generated voltage. Hence at zero p.f. leading, the armature reaction strengthens the main flux.

For intermediate values of p.f, the effect of armature reaction is partly distorting and partly weakening for inductive loads. For capacitive loads, the effect of armature reaction is partly distorting and partly strengthening. Note that in practice, loads are generally inductive.

Summary

When the alternator is loaded, the armature flux modifies the air-gap flux. Its angle (electrical) w.r.t. main flux depends on the load p.t. This is illustrated in Fig. (10.13).

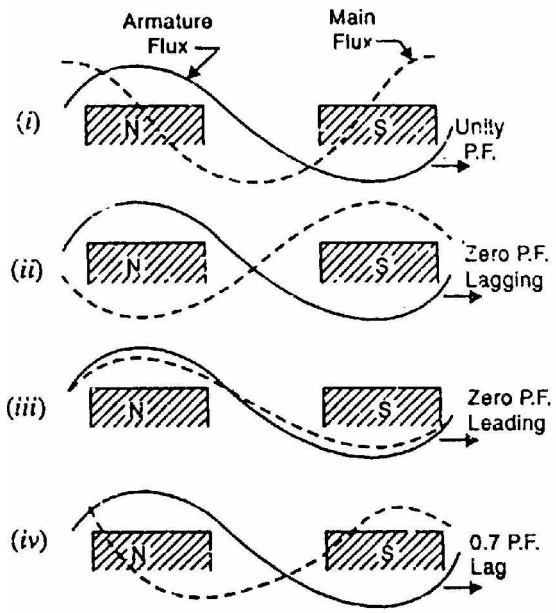

Fig.(10.13)

(a) When the load p.f. is unity, the effect of armature reaction is wholly distorting. In other words, the flux in the air-gap is distorted but not weakened. As shown in Fig. (10.13 (i)), the armature flux is 90° electrical behind Ac main flux. The result is that flux is strengthened at the trailing pole tips and weakened at the leading pole tips. However, the average flux in the air-gap practically remains unaltered.

(b) When the load p.f. is zero lagging, the effect of armature reaction is wholly demagnetizing. In other words, the flux in the air-gap is weakened. As shown in Fig. (10.13 (ii)), the wave representing the main flux is moved backwards through 90° (elect) so that it is in direct opposition to the armature flux. This considerably, reduces the air-gap flux and hence the generated e.m.f. To keep the value of the generated e.m.f. the same, the field excitation will have to be increased to compensate for the weakening of the air-gap flux.

(c) When the load p.f. is zero leading, the effect of armature reaction is wholly magnetizing. In other words, the flux in the air-gap is increased. As shown in Fig. (10.13 (iii)), the wave representing the main flux is now moved forward through 90° (elect.) so that it aids the armature flux. This considerably increases the air-gap flux and hence the generated e.m.f. To keep the value of the generated e.m.f. the same, the field excitation will have to be reduced.

(d) For intermediate values of load p.f. the effect of armature reaction is partly distorting and partly weakening for inductive loads. For capacitive loads, the effect is partly distorting and partly strengthening. Fig. (10.13 (iv)) shows the effect of armature reaction for an inductive load. In practice, load on the alternator is generally inductive.

10.10 Alternator on Load

Fig. (10.14) shows Y-connected alternator supplying inductive load (lagging p.f.). When the load on the alternator is increased (i.e., armature current I_a is increased), the field excitation and speed being kept constant, the terminal voltage V (phase value) of the alternator decreases. This is due to

(i) Voltage drop I_aR_a where R_a is the armature resistance per phase.
(ii) Voltage drop I_aX_L where X_L is the armature leakage reactance per phase.
(iii) Voltage drop because of armature reaction.

(i) Armature Resistance (R_a)

Since the armature or stator winding has some resistance, there will be an I_aR_a drop when current (I_a) flows through it. The armature resistance per phase is generally small so that I_aR_a drop is negligible for all practical purposes.

(ii) Armature Leakage Reactance (X_L)

When current flows through the armature winding, flux is set up and a part of it does not cross the air-gap and links the coil sides as shown in Fig. (10.15). This leakage flux alternates with current and gives the winding self-inductance. This is called armature leakage reactance. Therefore, there will be I_aX_L drop which is also effective in reducing the terminal voltage.

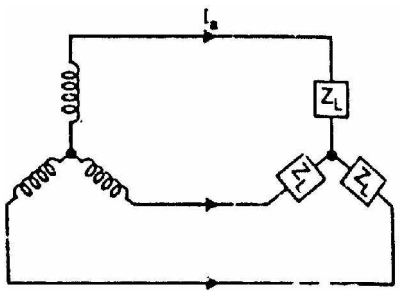

Fig.(10.14)

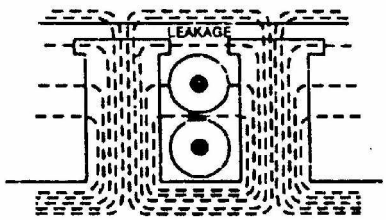

Fig.(10.15)

(iii) Armature reaction

The load is generally inductive and the effect of armature reaction is to reduce the generated voltage. Since armature reaction results in a voltage effect in a circuit caused by the change in flux produced by current in the same circuit, its effect is of the nature of an inductive reactance. Therefore, armature reaction effect is accounted for by assuming the presence of a fictitious reactance X_{AR} in the armature winding. The quantity X_{AR} is called reactance of armature reaction. The value of X_{AR} is such that I_aX_{AR} represents the voltage drop due to armature reaction.

Equivalent Circuit

Fig. (10.16) shows the equivalent circuit of the loaded alternator for one phase. All the quantities are per phase. Here

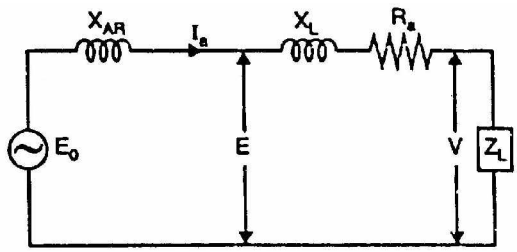

Fig.(10.16)

E_0 = No-load e.m.f.

E = Load induced e.m.f. It is the induced e.m.f. after allowing for armature reaction. It is equal to phasor difference of E_0 and I_aX_{AR}.

V = Terminal voltage. It is less than E by voltage drops in X_L and R_a.

$$\therefore \quad E = V + I_a(R_a + j\,X_L)$$

and $$E_0 = E + I_a(jX_{AR})$$

10.11 Synchronous Reactance (X_s)

The sum of armature leakage reactance (X_L) and reactance of armature reaction (X_{AR}) is called synchronous reactance X_s [See Fig. (10.17 (i))]. Note that all quantities are per phase.

$$X_s = X_L + X_{AR}$$

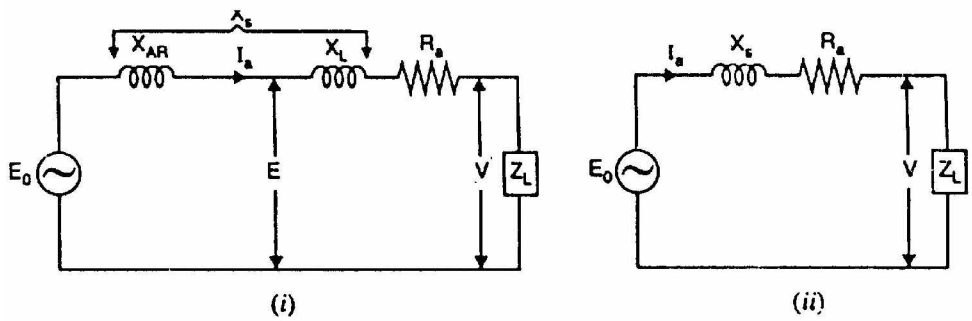

Fig.(10.17)

The synchronous reactance is a fictitious reactance employed to account for the voltage effects in the armature circuit produced by the actual armature leakage reactance and the change in the air-gap flux caused by armature reaction. The circuit then reduces to the one shown in Fig. (10.17 (ii)).

Synchronous impedance, $Z_s = R_a + j\,X_s$

The synchronous impedance is the fictitious impedance employed to account for the voltage effects in the armature circuit produced by the actual armature resistance, the actual armature leakage reactance and the change in the air-gap flux produced by armature reaction.

$$E_0 = V + I_a Z_s = V + I_a (R + j\,X_s)$$

10.12 Phasor Diagram of a Loaded Alternator

Consider a Y-connected alternator supplying inductive load, the load p.f. angle being ϕ. Fig. (10.18 (i)) shows the equivalent circuit of the alternator per phase. All quantities are per phase.

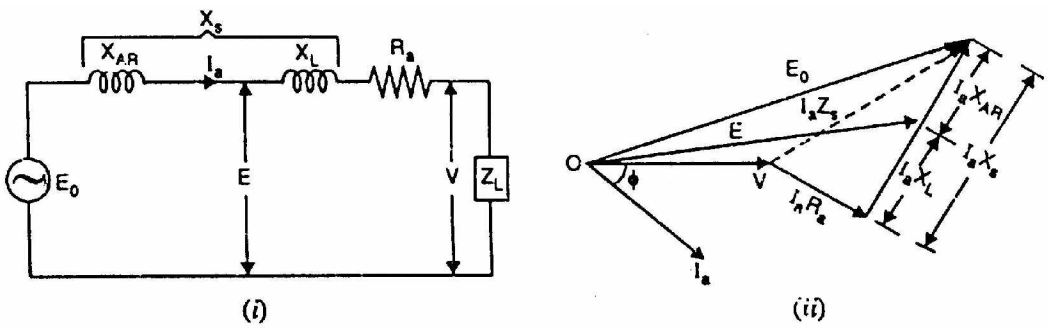

Fig.(10.18)

Fig. (10.18 (ii)) shows the phasor diagram of an alternator for the usual case of inductive load. The armature current I_a lags the terminal voltage V by p.f. angle ϕ. The phasor sum of V and drops I_aR_a and I_aX_L gives the load induced voltage E. It is the induced e.m.f. after allowing for armature reaction. The phasor sum of E and I_aX_{AR} gives the no-load e.m.f. E_0. The phasor diagram for unity and leading p.f. is left as an exercise for the reader. Note that in drawing the phasor diagram either the terminal voltage (V) or armature current (I_a) may be taken as the reference phasor.

10.13 Voltage Regulation

The voltage regulation of an alternator is defined as the change in terminal voltage from no-load to full-load (the speed and field excitation being constant) divided by full-load voltage.

$$\%\ \text{Voltage regulation} = \frac{\text{No - load voltage} - \text{Full - load voltage}}{\text{Full - load voltage}} \times 100$$

$$= \frac{E_0 - V}{V} \times 100$$

Note that $E_0 - V$ is the arithmetic difference and not the phasor difference. The factors affecting the voltage regulation of an alternator are:

(i) I_aR_a drop in armature winding
(ii) I_aX_L drop in armature winding
(iii) Voltage change due to armature reaction

We have seen that change in terminal voltage due to armature reaction depends upon the armature current as well as power-factor of the load. For leading load p.f., the no-load voltage is less than the full-load voltage. Hence voltage regulation is negative in this case. The effects of different load power factors on the change in the terminal voltage with changes of load on the alternator are shown in Fig. (10.19). Since the regulation of an alternator depends on the load and the load power factor, it is necessary to mention power factor while expressing regulation.

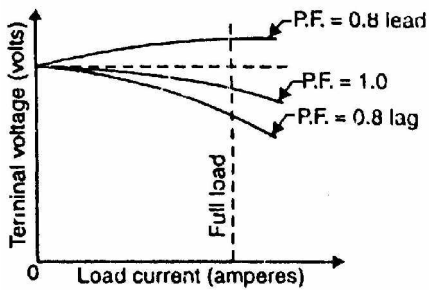

Fig.(10.19)

10.14 Determination of Voltage Regulation

The kVA ratings of commercial alternators are very high (e.g. 500 MVA). It is neither convenient nor practicable to determine the voltage regulation by direct loading. There are several indirect methods of determining the voltage regulation of an alternator. These methods require only a small amount of power as compared to the power required for direct loading method. Two such methods are:

1. Synchronous impedance or E.M.F. method
2. Ampere-turn or M.M.F. method

For either method, the following data are required:

(i) Armature resistance
(ii) Open-circuit characteristic (O.C.C.)
(iii) Short-Circuit characteristic (S.C.C.)

(i) Armature resistance

The armature resistance R_a per phase is determined by using direct current and the voltmeter-ammeter method. This is the d.c. value. The effective armature resistance (a.c. resistance) is greater than this value due to skin effect. It is a usual practice to take the effective resistance 1.5 times the d.c. value ($R_a = 1.5\ R_{dc}$).

(ii) Open-circuit characteristic (O.C.C)

Like the magnetization curve for a d.c. machine, the (Open-circuit characteristic of an alternator is the curve between armature terminal voltage (phase value) on open circuit and the field current when the alternator is running at rated speed.

Fig. (10.20) shows the circuit for determining the O.C.C. of an alternator. The alternator is run on no-load at the rated speed. The field current I_f is gradually

increased from zero (by adjusting field rheostat) until open-circuit voltage E_0 (phase value) is about 50% greater than the rated phase voltage. The graph is drawn between open-circuit voltage values and the corresponding values of I_f as shown in Fig. (10.21).

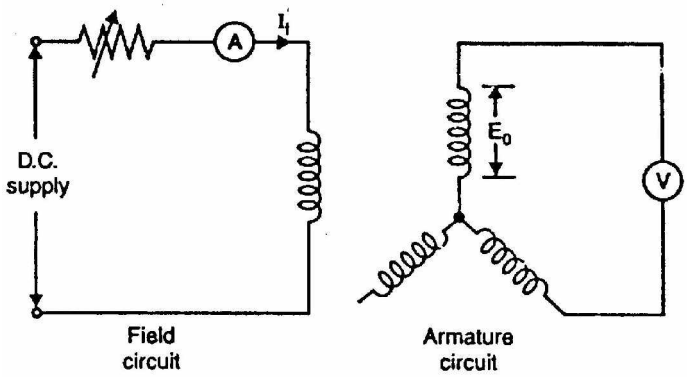

Fig.(10.20)

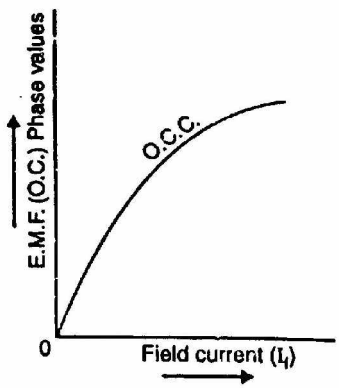

Fig.(10.21)

(iii) Short-circuit characteristic (S.C.C.)

In a short-circuit test, the alternator is run at rated speed and the armature terminals are short-circuited through identical ammeters [See Fig. (10.22)]. Only one ammeter need be read; but three are used for balance. The field current I_f is gradually increased from zero until the short-circuit armature current I_{SC} is about twice the rated current. The graph between short-circuit armature current and field current gives the short-circuit characteristic (S.C.C.) as shown in Fig. (10.23).

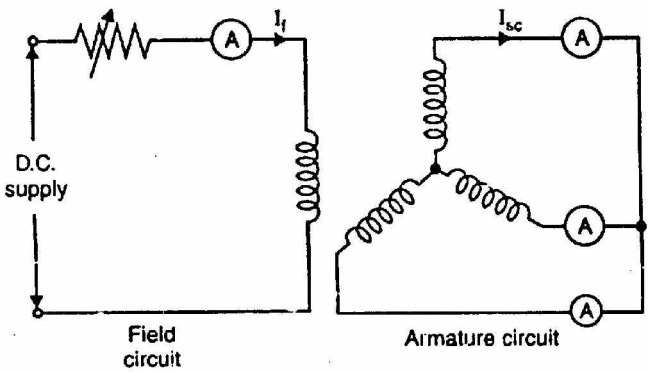

Fig.(10.22)

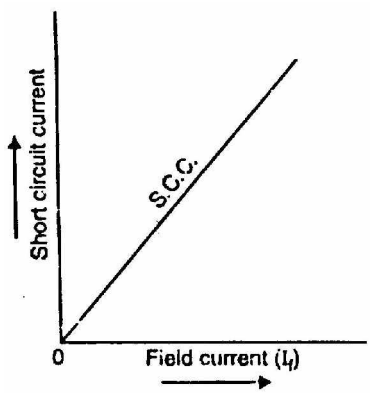

Fig.(10.23)

There is no need to take more than one reading because S.C.C. is a straight line passing through the origin. The reason is simple. Since armature resistance is much smaller than the synchronous reactance, the short-circuit armature current lags the induced voltage by very nearly 90°. Consequently, the armature flux and field flux are in direct opposition and the resultant flux is small. Since the

resultant flux is small, the saturation effects will be negligible and the short-circuit armature current, therefore, is directly proportional to the field current over the range from zero to well above the rated armature current.

10.15 Synchronous Impedance Method

In this method of finding the voltage regulation of an alternator, we find the synchronous impedance Z_s (and hence synchronous reactance X_s) of the alternator from the O.C.C. and S.S.C. For this reason, it is called synchronous impedance method. The method involves the following steps:

(i) Plot the O.C.C. and S.S.C. on the same field current base as shown in Fig. (10.24).

(ii) Consider a field current I_f. The open-circuit voltage corresponding to this field current is E_1. The short-circuit armature current corresponding to field current I_f is I_1. On short-circuit p.d. = 0 and voltage E_1 is being used to circulate the snort-circuit armature current I_1 against the synchronous impedance Z_s. This is illustrated in Fig. (10.25).

$$\therefore \quad E_1 = I_1 Z_s \quad \text{or} \quad Z_s = \frac{E_1 \text{ (Open - circuit)}}{I_1 \text{ (Short - circuit)}}$$

Note that E_1 is the phase value and so is I_1.

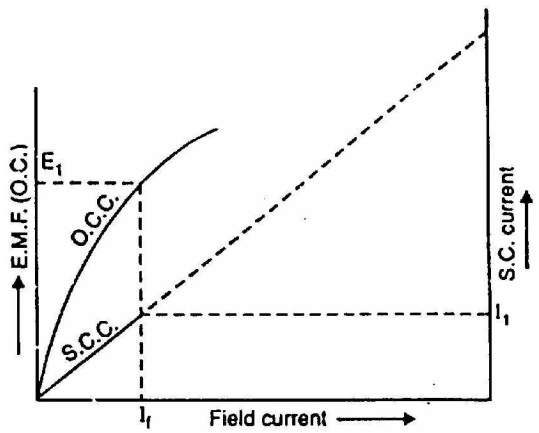

Fig.(10.24)

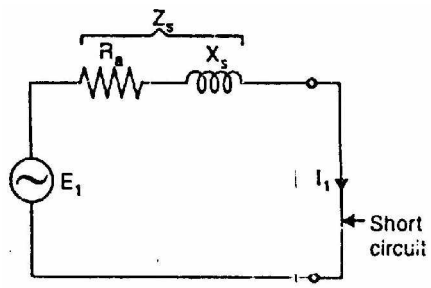

Fig.(10.25)

(ii) The armature resistance can be found as explained earlier.

$$\therefore \quad \text{Synchronous reactance,} \quad X_s = \sqrt{Z_s^2 - R_a^2}$$

(iv) Once we know R_a and X_s, the phasor diagram can be drawn for any load and any p.f. Fig. (10.26) shows the phasor diagram for the usual case of inductive load; the load p.f. being cos ϕ lagging. Note that in drawing the phasor diagram, current I_a has been taken as the reference phasor. The I_aR_a

drop is in phase with I_a while I_aX_s drop leads I_a by 90°. The phasor sum of V, I_aR_a and I_aX_s gives the no-load e.m.f. E_0.

$$E_0 = \sqrt{(OB)^2 + (BC)^2}$$

Now $\quad OB = V\cos\phi + I_aR_a$

and $\quad BC = V\sin\phi + I_aX_s$

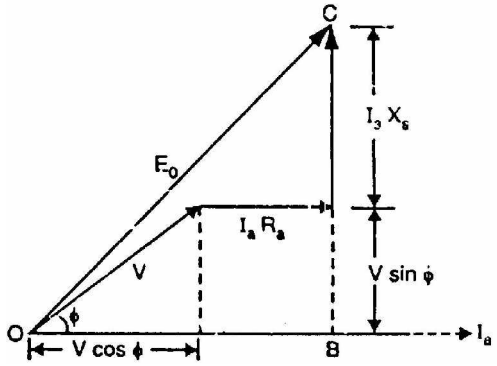

Fig.(10.26)

$$\therefore \quad E_0 = \sqrt{(V\cos$$

$$\therefore \quad \%\text{ voltage regulation} = \frac{E_0 - V}{V} \times 100$$

Drawback

This method if easy but it gives approximate results. The reason is simple. The combined effect of X_L (armature leakage reactance) and X_{AR} (reactance of armature reaction) is measured on short-circuit. Since the current in this condition is almost lagging 90°, the armature reaction will provide its worst demagnetizing effect. It follows that under any normal operation at, say 0.8 or 0.9 lagging power factors will produce error in calculations. This method gives a value higher than the value obtained from an actual load test. For this reason, it is called pessimistic method.

10.16 Ampere-Turn Method

This method of finding voltage regulation considers the opposite view to the synchronous impedance method. It assumes the armature leakage reactance to be additional armature reaction. Neglecting armature resistance (always small), this method assumes that change in terminal p.d. on load is due entirely to armature reaction. The same two tests (viz open-circuit and short-circuit test) are required as for synchronous reactance determination; the interpretation of the results only is different. Under short-circuit, the current lags by 90° (R_a considered zero) and the power factor is zero. Hence the armature reaction is entirely demagnetizing. Since the terminal p.d. is zero, all the field AT (ampere-turns) are neutralized by armature AT produced by the short circuit armature current.

(i) Suppose the alternator is supplying full-load current at normal voltage V (i.e., operating load voltage) and zero p.f. lagging. Then d.c. field AT required will be those needed to produce

normal voltage V (or if R_a is to be taken into account, then $V + I_aR_a \cos \phi$) on no-load plus those to overcome the armature reaction,

Let AO = field AT required to produce the normal voltage V (or $V + I_aR_a \cos \phi$) at no-load

OB_1 = fielder required to neutralize the armature reaction

Then total field AT required are the phasor sum of AO and OB_1 [See Fig. (10.27 (i))] i.e.,

$$\text{Total field AT, } AB_1 = AO + OB_1$$

The AO can be found from O.C.C. and OB_1 can be determined from S.C.C. Note that the use of a d.c. quantity (field AT) as a phasor is perfectly valid in this case because the d.c. field is rotating at the same speed as the a.c. phasors i.e., $\omega = 2\pi f$.

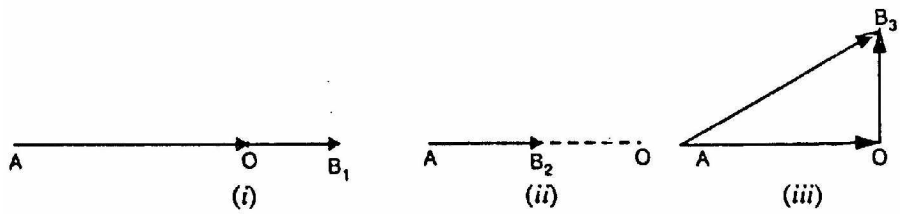

Fig.(10.27)

(ii) For a full-load current of zero p.f. leading, the armature AT are unchanged. Since they aid the main field, less field AT are required to produce the given e.m.f.

$\therefore$ Total field AT, $AB_2 = AO - B_2O$

where B_2O = fielder required to neutralize armature reaction

This is illustrated in Fig. (10.27 (ii)). Note that again AO are determined from O.C.C. and B_2O from S.C.C.

(iii) Between zero lagging and zero leading power factors, the armature m.m.f. rotates through 180°. At unity p.f., armature reaction is cross-magnetizing only. Therefore, OB_3 is drawn perpendicular to AO [See Fig. (10.27 (iii))]. Now AB_3 shows the required AT in magnitude and direction.

General case

We now discuss the case when the p.f. has any value between zero (lagging or leading) and unity. If the power-factor is $\cos \phi$ lagging, then ϕ is laid off to the right of the vertical line OB_3 as shown in Fig. (10.28 (i)). The total field required are AB_4 i.e., phasor sum of AO and OB_4. If the power factor is $\cos \phi$ leading, then ϕ is laid off to the left of the vertical line OB_3 as shown in Fig. (10.28 (ii)). The total field AT required are AB_5 i.e., phase sum of AO and OB_5.

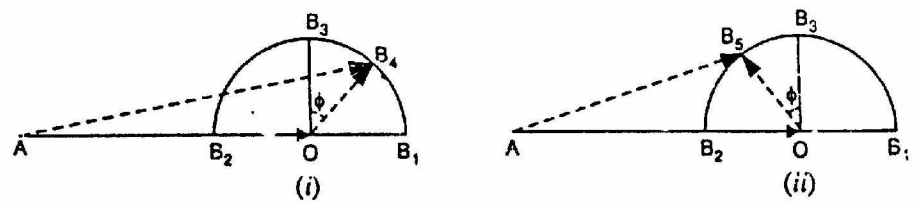

Fig.(10.28)

Since current ∝ AT, it is more convenient to work in terms of field current. Fig. (10.29) shows the current diagram for the usual case of lagging power factor. Here AO represents the field current required to produce normal voltage V(or V + I_aR_a cos ϕ) on no-load. The phasor OB represents the field current required for producing full-load current on short-circuit. The resultant field current is AB and is the phasor sum of AO and OB. Note that phasor AB represents the field current required for demagnetizing and to produce voltage V and I_aR_a cos ϕ drop (if R_a is taken into account).

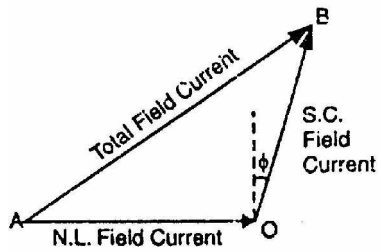

Fig.(10.29)

10.17 Procedure for at Method

Suppose the alternator is supplying full-load current I_a at operating voltage V and p.f. cos ϕ lagging. The procedure for finding voltage regulation for AT method is as under:

(i) From the O.C.C., field current OA required to produce the operating load voltage V (or V + I_aR_a cos ϕ) is determined [See Fig. (10.30)]. The field current OA is laid off horizontally as shown in Fig. (10.31).

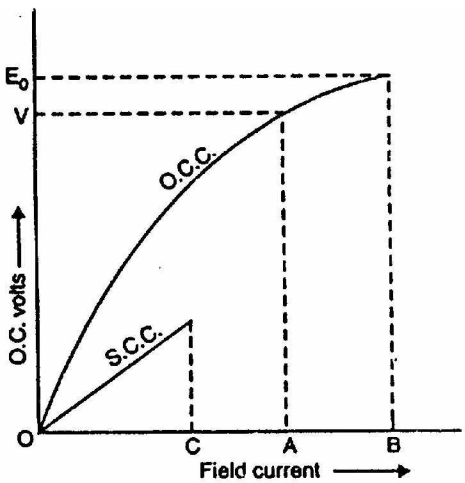

Fig.(10.30)

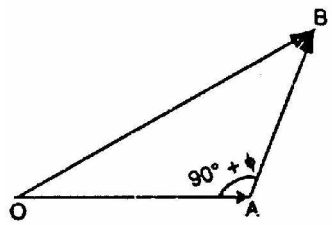

Fig.(10.31)

(ii) From S.C.C., the field current OC required for producing full-load current I_a on short-circuit is determined. The phasor AB (= OC) is drawn at an angle of (90° + ϕ) i.e., ∠ OAB = (90° + ϕ) as shown in Fig. (10.31).

(iii) The phasor sum of OA and AB gives the total field current OB required. The O.C. voltage E_0 corresponding to field current OB on O.C.C. is the no-load e,m.f.

$$\therefore \quad \% \text{ voltage regulation} = \frac{E_0 - V}{V} \times 100$$

This method gives a regulation lower than the actual performance of the machine. For this reason, it is known as Optimistic Method.

10.18 Effect of Salient Poles

The treatment developed so far is applicable only to cylindrical rotor machines. In these machines, the air-gap is uniform so that the reluctance of the magnetic path is the same in all directions. Therefore, the effect of armature reaction can be accounted for by one reactance—the synchronous reactance X_s. It is because the value of X_s is constant for all directions of armature flux relative to the rotor. However, in a salient-pole machine, the radial length of the air-gap varies [See Fig. (10.32)] so that reluctance of the magnetic circuit along the polar axis (called direct axis or d-axis) is much less than the reluctance along the interpolar axis (called quadrature axis or q-axis). This is illustrated in Fig. (10.33).

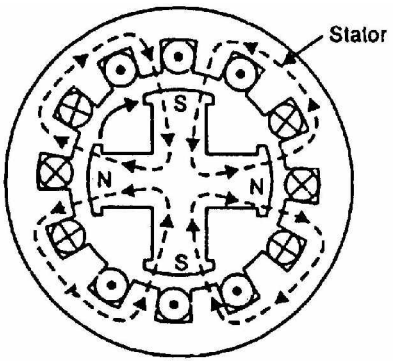

Fig.(10.32)

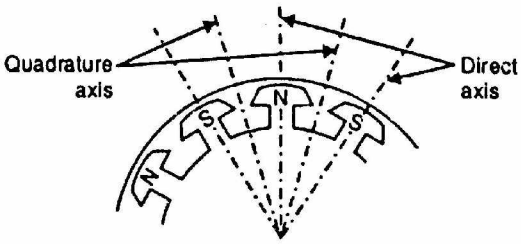

Fig.(10.33)

Because of the lower reluctance along the polar axis (i.e., d-axis), more flux is produced along d-axis than along the q-axis. Therefore, reactance due to armature reaction will be different along d-axis and q-axis. These are:

X_{ad} = direct axis reactance due to armature reaction

X_{aq} = quadrature axis reactance due to armature reaction

10.19 Two-Reactance Concept for Salient-Pole Machines

The effects of salient poles can be taken into account by resolving the armature current into two components; I_d perpendicular to excitation voltage E_0 and I_a along E_0 as shown in phasor diagram in Fig. (10.34). Note that this diagram is drawn for an unsaturated salient-pole generator operating at a lagging power factor cos ϕ. With each of the component currents I_d and I_q, there is associated a component synchronous reactance X_d and X_q respectively.

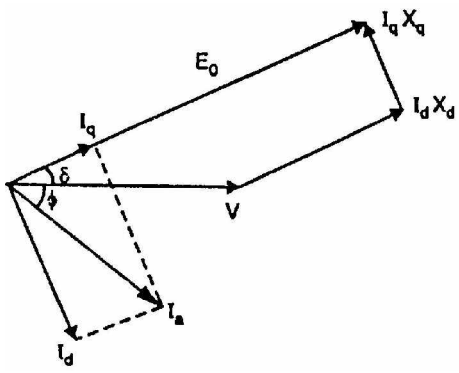

Fig.(10.34)

X_d = direct axis synchronous reactance

X_q = quadrature axis synchronous reactance

If X_1 is the armature leakage reactance and is assumed to be constant for direct and quadrature-axis currents, then,

$$X_d = X_{ad} + X_1; \qquad X_q = X_{aq} + X_1$$

Note that in drawing the phasor diagram, the armature resistance R_a is neglected since it is quite small. Further, all values arc phase values. Here V is the terminal voltage phase and E_0 is the e.m.f. per phase to which the generator is excited. Referring to Fig. (10.34).

$$I_q = I_a \cos(\delta + \phi) \quad \text{and} \quad I_d = I_a \sin(\delta + \phi)$$

The angle δ between E_0 and V is called the power angle.

$$E_0 = V \cos\delta + I_d X_d$$

$$= V \cos\delta + I_a X_d \sin(\delta + \phi) \qquad [\text{n } I_d = I_a \sin(\delta + \phi)]$$

$$\therefore \quad E_0 = V \cos\delta + I_a X_d (\sin\delta \cos\phi + \cos\delta \sin\phi) \qquad \text{(i)}$$

Also $\quad V \sin\delta = I_q X_q$

$$= I_a X_q \cos(\delta + \phi) \qquad [\text{n } I_q = I_a \cos(\delta + \phi)]$$

$$\therefore \quad V \sin\delta = I_a X_q (\cos\delta \cos\phi - \sin\delta \sin\phi) \qquad \text{(ii)}$$

10.20 Power Developed in Salient-Pole Synchronous Generator

It we neglect armature resistance R_a (and hence Cu loss), then power developed (P_d) by an alternator is equal to the power output (P_{out}). Fig. (10.35) shows the phasor diagram of the salient-pole synchronous generator. The per phase power output of the alternator is

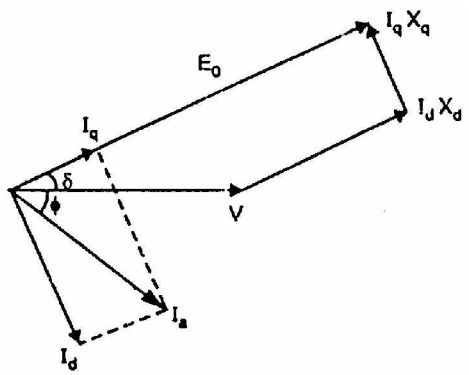

Fig.(10.35)

$$P_{out} = P_d = V I_a \cos\phi \qquad (i)$$

Now $\quad I_a \cos\phi = I_q \cos\delta + I_d \sin\delta$

Also $\quad E_0 = V\cos\delta + I_d X_d$

$$\therefore \quad I_d = \frac{E_0 - V\cos\delta}{X_d}$$

And $\quad V\sin\delta = I_q X_q$

$$\therefore \quad I_q = \frac{V\sin\delta}{X_q}$$

$$\therefore \quad P_d = V\left[I_q \cos\delta + I_d \sin\delta\right] \qquad (\text{n} \;\; I_a \cos\phi = I_q \cos\delta + I_d \sin\delta)$$

Putting the values of I_q and I_d, we have,

$$P_d = V\left[\frac{V\sin\delta}{X_q} \times \cos\delta + \frac{E_0 - V\cos\delta}{X_d} \times \sin\delta\right]$$

$$= \frac{E_0 V}{X_d}\sin\delta + V^2\left[\frac{\sin\delta\cos\delta}{X_q} - \frac{\sin\delta\cos\delta}{X_d}\right]$$

$$= \frac{E_0 V}{X_d}\sin\delta + \frac{V^2(X_d - X_q)}{X_d X_q} \times \frac{\sin 2\delta}{2}$$

$$\therefore \quad P_d = \frac{E_0 V}{X_d}\sin\delta + \frac{V^2(X_d - X_q)}{2X_d X_q}\sin 2\delta \quad \text{per phase} \qquad \text{(ii)}$$

The total power developed would be three times the above power. The following points may be noted:

(i) If there is no saliency, $X_d = X_q$

$$\therefore \quad P_d = \frac{E_0 V}{X_d}\sin\delta \quad \text{per phase}$$

This is the power developed by cylindrical rotor machine.

(ii) The second term in eq. (ii) above introduces the effect of salient poles. It represents the reluctance power i.e., power due to saliency.

(iii) If $E_0 = 0$, then, $$P_d = \frac{V^2(X_d - X_q)}{2X_d X_q}\sin 2\delta \quad \text{per phase}$$

The power obtained with zero excitation is called reluctance power. It should be noted that reluctance power is independent of the excitation.

Power angle characteristic

Fig (10.36) shows the power-angle characteristic of a salient-pole machine. It is clear that reluctance power varies with δ at twice the rate of the excitation power. The peak power is seen to be displaced towards δ = 0, the amount of displacement depends upon the excitation. In Fig. (10.36), the excitation is such that the excitation term has a peak value about 2.5 times that of the reluctance term. Under steady-state conditions, the reluctance term is positive because $X_d > X_q$.

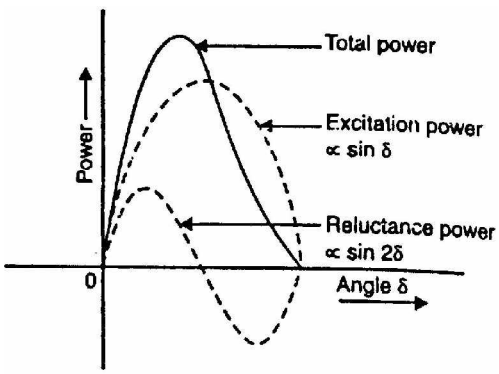

Fig.(10.36)

10.21 Parallel Operation of Alternators

It is rare to find a 3-phase alternator supplying its own load independently except under test conditions. In practice, a very large number of 3-phase alternators operate in parallel because the various power stations are interconnected through the national grid. Therefore, the output of any single alternator is small compared with the total interconnected capacity. For example, the total capacity of the interconnected system may be over 40,000 MW while the capacity of the biggest single alternator may be 500 MW. For this reason, the performance of a single alternator is unlikely to affect appreciably the voltage

and frequency of the whole system. An alternator connected to such a system is said to be connected to infinite busbars. The outstanding electrical characteristics of such busbars are that they are constant-voltage, constant-frequency busbars.

Fig. (10.37) shows a typical infinite bus system. Loads are tapped from the infinite bus at various load centres. The alternators may be connected to or disconnected from the infinite bus, depending on the power demand on the system. If an alternator is connected to infinite busbars, no matter what power is delivered by the incoming alternator, the voltage and frequency of the system remain the same. The operation of connecting an alternator to the infinite busbars is known as paralleling with the infinite busbars. It may be noted that before an alternator is connected to an infinite busbars, certain conditions must be satisfied.

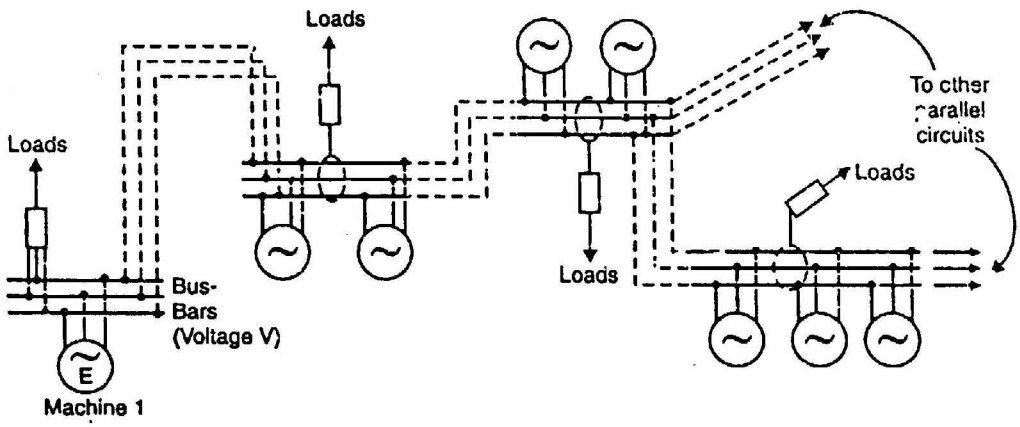

Fig.(10.37)

10.22 Advantages of Parallel Operation of Alternators

The following are the advantages of operating alternators in parallel:

(i) **Continuity of service**. The continuity of service is one of the important requirements of any electrical apparatus. If one alternator fails, the continuity of supply can be maintained through the other healthy units. This will ensure uninterrupted supply to the consumers.

(ii) **Efficiency**. The load on the power system varies during the whole day; being minimum during die late night hours. Since alternators operate most efficiently when delivering full-load, units can be added or put off depending upon the load requirement. This permits the efficient operation of the power system.

(iii) **Maintenance and repair**. It is often desirable to carry out routine maintenance and repair of one or more units. For this purpose, the desired unit/units can be shut down and the continuity of supply is maintained through the other units.

(iv) **Load growth**. The load demand is increasing due to the increasing use of electrical energy. The load growth can be met by adding more units without disturbing the original installation.

10.23 Conditions for Paralleling Alternator with Infinite Busbars

The proper method of connecting an alternator to the infinite busbars is called synchronizing. A stationary alternator must not be connected to live busbars. It is because the induced e.m.f. is zero at standstill and a short-circuit will result. In order to connect an alternator safely to the infinite busbars, the following conditions are met:

(i) The terminal voltage (r.m.s. value) of the incoming alternator must be the same as busbars voltage.

(ii) The frequency of the generated voltage of the incoming alternator must be equal to the busbars frequency.

(iii) The phase of the incoming alternator voltage must be identical with the phase of the busbars voltage. In other words, the two voltages must be in phase with each other.

(iv) The phase sequence of the voltage of the incoming alternator should be the same as that of the busbars.

The magnitude of the voltage of the incoming alternator can be adjusted by changing its field excitation. The frequency of the incoming alternator can be changed by adjusting the speed of the prime mover driving the alternator.

Condition (i) is indicated by a voltmeter, conditions (ii) and (iii) are indicated by synchronizing lamps or a synchroscope. The condition (iv) is indicated by a phase sequence indicator.

10.24 Methods of Synchronization

The method of connecting an incoming alternator safely to the live busbars is called synchronizing. The equality of voltage between the incoming alternator and the busbars can be easily checked by a voltmeter. The phase sequence of the alternator and the busbars can be checked by a phase sequence indicator. Differences in frequency and phase of the voltages of the incoming alternator and busbars can be checked by one of the following two methods:

(i) By Three Lamp (one dark, two bright) method

(ii) By synchroscope

(i) Three lamp method

In this method of synchronizing, three lamps L_1, L_2 and L_3 are connected as shown in Fig. (10.38). The lamp L_1 is straight connected between the corresponding phases (R_1 and R_2) and the other two are cross-connected between the other two phases. Thus lamp L_2 is connected between Y_1 and B_2 and lamp L_3 between B_1 and Y_2. When the frequency and phase of the voltage of the incoming alternator is the same as that of the busbars, the straight connected lamps L_1 will be dark while cross-connected lamps L_2 and L_3 will be equally bright. At this instant, the synchronization is perfect and the switch of the incoming alternator can be closed to connect it to the busbars.

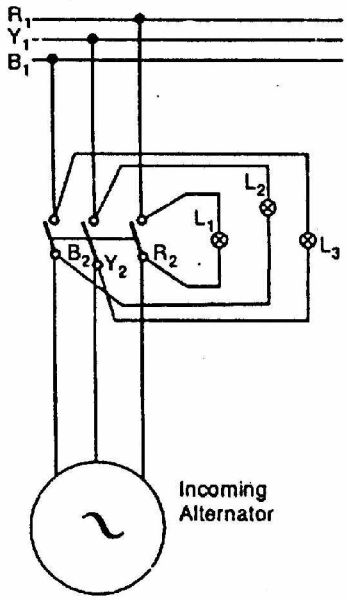

Fig.(10.38)

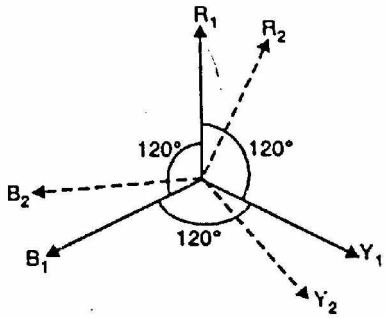

Fig.(10.39)

In Fig. (10.39), phasors R_1, Y_1 and B_1 represent the busbars voltages and phasors R_2, Y_2 and B_2 represent the voltages of the incoming alternator. At the instant when R_1 is in phase with R_2, voltage across lamp L_1 is zero and voltages across lamps L_2 and L_3 are equal. Therefore, the lamp L_1 is dark while lamps L_2 and L_3 will be equally bright. At this instant, the switch of the incoming alternator can be closed. Thus incoming alternator gets connected in parallel with the busbars.

(ii) Synchroscope

A synchroscope is an instrument that indicates by means of a revolving pointer the phase difference and frequency difference between the voltages of the incoming alternator and the busbars [See Fig. (10.40)]. It is essentially-a small motor, the

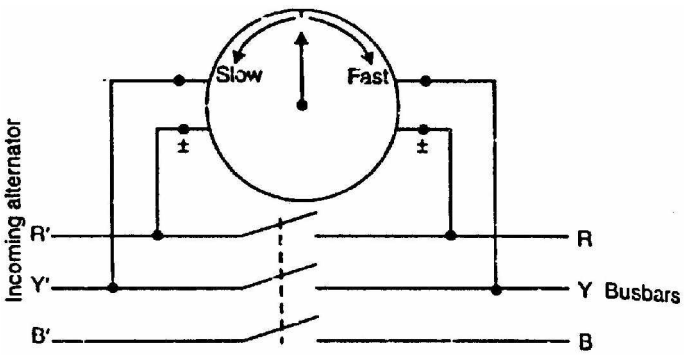

Fig.(10.40)

field being supplied from the busbars through a potential transformer and the rotor from the incoming alternator. A pointer is attached to the rotor. When the incoming alternator is running fast (i.e., frequency of the incoming alternator is higher than that of the busbars), the rotor and hence the pointer moves in the clockwise direction. When the incoming alternator is running slow (i.e., frequency of the incoming alternator is lower than that of the busbars), the pointer moves in anti-clockwise direction. When the frequency of the incoming alternator is equal to that of the busbars, no torque acts on the rotor and the pointer points vertically upwards ("12 O' clock"). It indicates the correct instant for connecting the incoming alternator to the busbars. The synchroscope method is superior to the lamp method because it not only gives a positive indication of the time to close the switch but also indicates the adjustment to be made should there be a difference between the frequencies of the incoming alternator and the busbars.

10.25 Synchronising Action

When two or more alternators have been connected in parallel, they will remain in stable operation under all normal conditions i.e., voltage, frequency, speed and phase equality will continue. In other words, once synchronized properly, the alternators will continue to run in synchronism under all normal conditions. If one alternator tries to fall out of synchronism, it is immediately counteracted by the production of a synchronizing torque which brings it back to synchronism. This automatic action is called the synchronizing action of the alternators.

Consider two similar single-phase alternators 1 and 2 operating in parallel as shown in Fig. (10.41 (i)). For simplicity, let us assume that the alternators are at no-load. When in exact synchronism, the magnitudes of the e.m.f.s E_1 (machine 1) and E_2 (machine 2) are equal. These e.m.f.s are acting in the same direction with respect to the external circuit [See Fig. (10.41 (ii))]. But in relation to each other, these e.m.f.s are in phase opposition i.e., if we trace the closed circuit formed by the two alternators we find that the e.m.f.s oppose each other [See Fig. (10.41 (iii))]. When the alternators are in exact synchronism, E_1 and E_2 are in exact phase opposition. Since $E_1 = E_2$ in magnitude, no current flows in the closed circuit formed by the two alternators.

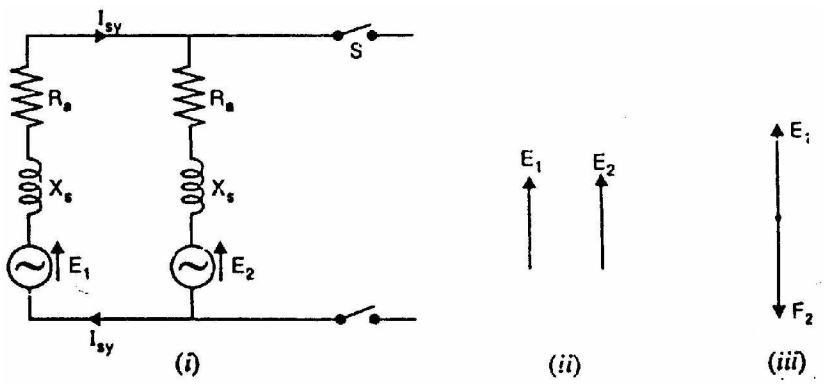

Fig.(10.41)

If one alternator drops out of synchronism, there is an automatic action to re-establish synchronism. Let us discuss this point.

(i) Effect of speed change

Suppose, due to any reason, the speed of machine 2 falls. Then e.m.f. E_2 will fall back by a phase angle of a electrical degrees as shown in Fig. (10.42) (though still $E_1 = E_2$). There will be resultant e.m.f. E_r in the closed circuit formed by the two alternators. This e.m.f. E_r will circulate current (known as synchronizing current I_{syt}) in this closed circuit.

$$\text{Synchronizing current, } I_{sy} = \frac{E_r}{2Z_s}$$

The current I_{sy} lags behind E_r by an angle θ given by;

$$\tan\theta = \frac{2X_s}{2R_a} = \frac{X_s}{R_a}$$

where R_a = armature resistance of each alternator
X_s = synchronous reactance of each alternator
Z_s = synchronous impedance of each alternator

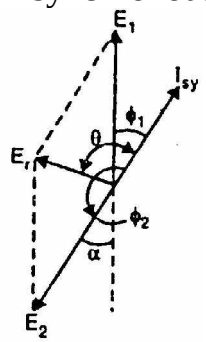

Fig.(10.42)

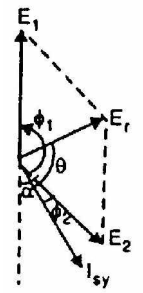

Fig.(10.43)

Since R_a is very small as compared to X_s, θ is nearly 90° so that the current I_{sy} is almost in phase with E_1 and in phase opposition to E_2. This means that machine 1 is generating and machine 2 is motoring. Consequently, machine 1 tends to slow down and machine 2, by accepting power, tends to accelerate. This restores the status quo i.e., synchronism is re-established.

Conversely, if E_2 tends to advance in phase [See Fig. (10.43)], the directions of E_r and I_{sy} are changed such that now machine 2 is generating and machine 1 is motoring. Once again the synchronism is restored.

(ii) Effect of inequality of e.m.f.s.

The automatic re-establishment of synchronism of two alternators operating in parallel also extends to any changes tending to alter the individual e.m.f.s. When in exact synchronism, then $E_1 = E_2$ (magnitude) and they are in exact phase opposition as shown in Fig. (10.44 (i)). Suppose due to any reason, e.m.f. E_1 increases. Then resultant e.m.f. E_r exists in the closed circuit formed by the two

alternators. Then $E_r = E_1 - E_2$ and is in phase with E_1. The resultant e.m.f. E_r sends synchronizing current I_{sy} in the closed circuit. Here again the current I_{sy} almost lags behind E_r. by 90° (**n** $Z_s \simeq X_s$) as shown in Fig. (10.44 (ii)). Also I_{sy} lags almost 90° behind E_1 and leads E_2 almost by 90°. The power produced is practically zero; just enough to overcome copper losses. The current I_{sy} lags behind E_1 and produces a demagnetizing armature reaction effect on machine 1. At the same time, I_{sy} leads E_2 and produces magnetizing armature reaction effect on machine 2. Thus E_1 tends to fall and E_2 tends to rise. The result is that synchronism is re-established. The converse is true for $E_2 > E_1$ as shown in Fig. (10.44 (iii)).

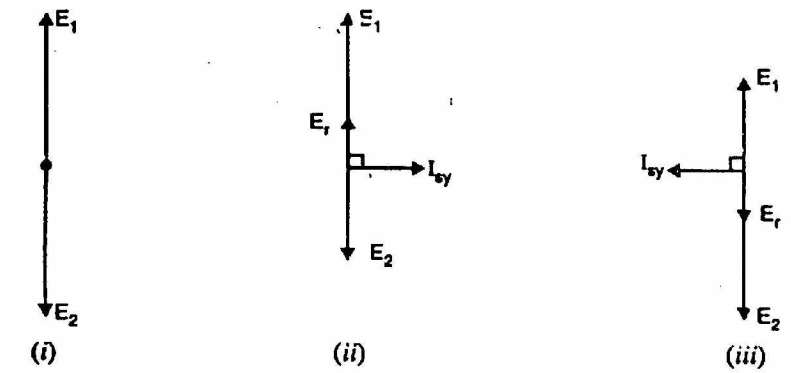

Fig.(10.44)

10.26 Synchronizing Power

When two alternators are operating in parallel, each machine has an inherent tendency to remain synchronized. Consider two similar single-phase alternators 1 and 2 operating in parallel at no-load [See Fig. (10.45)]. Suppose, due to any reason, the speed of machine 2 decreases. This will cause E_2 to fall back by a phase angle of a electrical degrees as shown in Fig. (10.46) (though still $E_1 = E_2$). Within the local circuit formed by two alternators, the resultant e.m.f. E_r is the phasor difference $E_1 - E_2$. This resultant e.m.f. results in the production of synchronizing current I_{sy} which sets up synchronizing torque. The synchronizing torque retards machine 1 and accelerates machine 2 so that synchronism is re-established. The power associated with synchronizing torque is called synchronizing power.

In Fig. (10.45), machine 1 is generating and machine 2 is motoring. The power supplied by machine 1 is called synchronizing power. Referring to Fig. (10.46), we have,

$$\text{Synchronizing power, } P_{sy} = E_1 I_{sy} \cos\phi_1 = E_1 I_{sy} \cos(90° - \theta) = E_1 I_{sy} \sin\theta$$

$$= E_1 I_{sy} \qquad (\textbf{n} \quad \theta \simeq 90° \text{ so that } \sin\theta = 1)$$

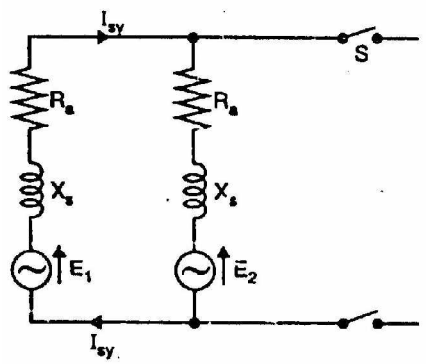

Fig.(10.45)

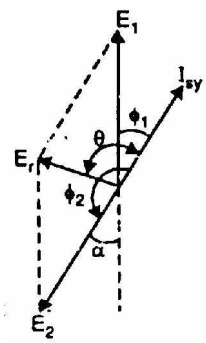

Fig.(10.46)

The synchronizing power goes to supply power input to machine 2 and the Cu losses in the local circuit of the two machines.

$\therefore \quad E_1 I_{sy} = E_2 I_{sy} + \text{Cu losses}$

Resultant e.m.f., $E_r = 2E\cos\dfrac{(180° - \alpha)}{2}$ [**n** $E_1 = E'_2 = E(\text{say})$]

$$= 2E\cos\left(90° - \frac{\alpha}{2}\right) = 2E\sin\frac{\alpha}{2} = 2E \times \frac{\alpha}{2} \qquad [\textbf{n}\ \alpha \text{ is small}]$$

$$\therefore \quad E_r = \alpha E \qquad \text{(i)}$$

Note that in this expression, a is in electrical radians.

Synchronizing current, $I_{sy} = \dfrac{E_r}{2X_s} = \dfrac{\alpha E}{2X_s}$ R_a of bbth machines is negligible

Here X_s = synchronous reactance of each machine

$\therefore$ Synchronizing power supplied by machine 1 is

$$P_{sy} = E_1 I_{sy}$$

$$= E \times \frac{\alpha E}{2X_s} = \frac{\alpha E^2}{2X_s} \qquad \left(\textbf{n}\ E_1 = E_2 \text{ and } I_{sy} = \frac{\alpha E}{2X_s}\right)$$

$$\therefore \quad P_{sy} = \frac{\alpha E^2}{2X_s} \quad \text{per phase}$$

Total synchronizing power for 3 phases

$$= 3P_{sy} = \frac{3\alpha E^2}{2X_s}$$

Note that this is the value of synchronizing power when two alternators, operate in parallel at no-load.

10.27 Alternators Connected to Infinite Busbars

When an alternator is connected to an infinite busbars, the impedance (or synchronous reactance) of only that alternator is considered.

$$\therefore \quad I_{sy} = \frac{E_r}{Z_s} = \frac{\alpha E}{X_s} \qquad \text{if } R_a \text{ is negligible}$$

$$\therefore \quad P_{sy} = \frac{\alpha E^2}{X_s} \quad \text{per phase}$$

Total synchronizing power for 3 phases

$$= 3P_{sy} = \frac{3\alpha E^2}{X_s}$$

Synchronizing Torque T_{sy}

Let T_{sy} be the synchronizing torque in newton-metre (N-m).

(i) **When there are two alternators is parallel**

$$3P_{sy} = \frac{2\pi N_s T_{sy}}{60}$$

$$\therefore \quad T_{sy} = \frac{3P_{sy} \times 60}{2\pi N_s} \qquad \left(\text{Here } P_{sy} = \frac{\alpha E^2}{2X_s}\right)$$

(ii) When alternator is connected to infinite Busbars

$$3P_{sy} = \frac{2\pi N_s T_{sy}}{60}$$

$$\therefore \quad T_{sy} = \frac{3P_{sy} \times 60}{2\pi N_s} \qquad \left(\text{Here } P_{sy} = \frac{\alpha E^2}{X_s}\right)$$

10.28 Effect of Load on Synchronizing Power

In this case, the approximate value of synchronizing power is given by;

$$P_{sy} = \frac{\alpha EV}{X_s} \quad \text{per phase}$$

where E = e.m.f. of alternator/phase
V = busbars voltage/phase

As already discussed, for a lagging p.f,

$$E = \sqrt{(V\cos\phi + I_a R_a)^2 + (V\sin\phi + I_a X_s)^2}$$

10.29 Sharing of Load Currents by Two Alternators in Parallel

Consider two alternators with identical speed/load characteristics connected in parallel as shown in Fig. (10.47).

Let E_1, E_2 = induced e.m.f.s per phase

Z_1, Z_2 = synchronous impedances per phase

Z = load impedance per phase

I_1, I_2 = currents supplied by two machines

V = common terminal voltage per phase

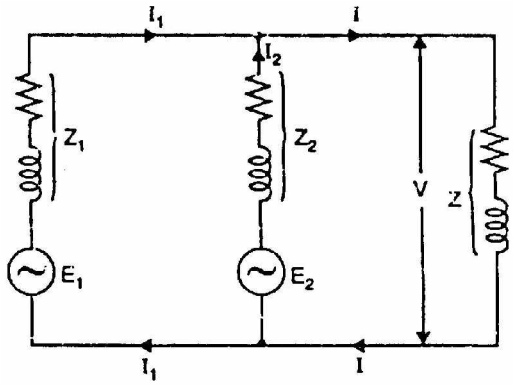

Fig.(10.47)

$$V = E_1 - I_1Z_1 = E_2 - I_2Z_2$$

$$\therefore \quad I_1 = \frac{E_1 - V}{Z_1}; \qquad I_2 = \frac{E_2 - V}{Z_2}$$

$$I = I_1 + I_2 = \frac{E_1 - V}{Z_1} + \frac{E_1 - V}{Z_1}$$

$$V = (I_1 + I_2)Z = IZ$$

Circulating current on no-load is

$$I_C = \frac{E_1 - E_2}{Z_1 + Z_2}$$

10.30 Alternator on Infinite Busbars

Upto this point, we have considered only a single alternator working on an isolated load or two such machines operating in parallel. In practice, generating stations do not operate as isolated units but are interconnected by the national grid. The result is that a very large number of alternators operate in parallel. An alternator connected to such a network is said to be operating on infinite busbars. The behaviour of alternators connected to an infinite busbars is as under:

(i) Any change made in the operating conditions of one alternator will not change the terminal voltage or frequency of the system. In other words, terminal voltage (busbars voltage) and frequency are not affected by changing the operating conditions of one alternator. It is because of large size and inertia of the system.

(ii) The kW output supplied by an alternator depends solely on the mechanical power supplied to the prime mover of the alternator. An increase in mechanical power to the prime mover increases the kW output of the

alternator and not the kVAR. A decrease in the mechanical power to the prime mover decreases the kW output of the alternator and not the kVAR.

(iii) If the mechanical power to the prime mover of an alternator is kept constant, then change in excitation will change the power factor at which the machine supplies changed current. In other words, change of excitation controls the kVAR and not kW.

The change of driving torque controls the kW output and not kVAR of an alternator. The change of excitation controls the kVAR and not the kW output of an alternator.

Note. An infinite busbars system has constant terminal voltage and constant busbars frequency because of its large size and inertia. However, the busbars voltage can be raised or lowered by increasing or decreasing simultaneously the field excitation of a large number of alternators. Likewise, system frequency can be raised or lowered by increasing or decreasing the speed of prime movers of a large number of alternators.

10.31 Effect of Change of Excitation and Mechanical Input

Consider a star-connected alternator connected to an infinite busbars as shown in Fig. (10.48). Note that infinite busbars means that busbars voltage will remain constant and no frequency change will occur regardless of changes made in power input or field excitation of the alternator connected to it.

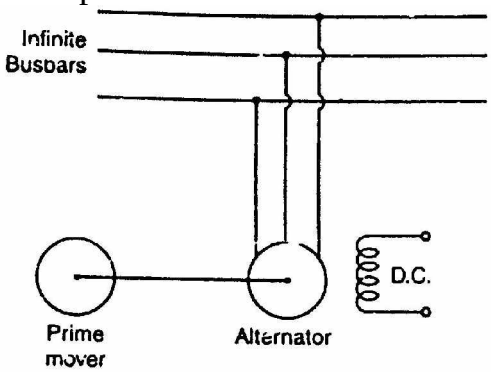

Fig.(10.48)

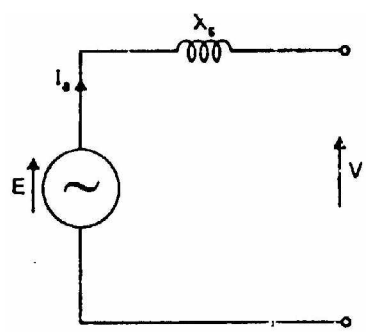

Fig.(10.49)

Let V = busbars voltage/phase
E = e.m.f. of alternator/phase
X_s = synchronous reactance of alternator/phase

Armature current/phase, $I_s = \dfrac{E - V}{X_s}$

Fig. (10.49) shows the equivalent circuit of alternator for one phase.

(i) Effect of change of field excitation

Suppose the alternator connected to infinite busbars is operating at unity p.f. It is then said to be normally excited. Suppose that excitation of the alternator is increased (overexcited) while the power input to the prime mover is unchanged. The active power output (W or kW) of the alternator will thus remain unchanged i.e., active component of current is unaltered. The overexcited alternator will supply lagging current (and hence lagging reactive power) to the infinite busbars. This action can be explained by the m.m.f. of armature reaction. When the alternator is overexcited, it must deliver lagging current since lagging current produces an opposing m.m.f. to reduce the over-excitation. Thus an overexcited alternator supplies lagging current in addition to the constant active component of current. Therefore, an overexcited alternator will operate at lagging power factor. Note that excitation does not control the active power but it controls power factor of the current supplied by the alternator to the infinite busbars. Fig. (10.50) shows the phasor diagram of an overexcited alternator connected to infinite busbars. The angle δ between E and V is called power angle.

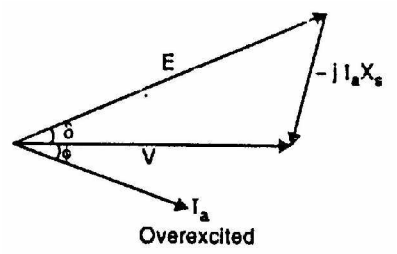

Fig.(10.50)

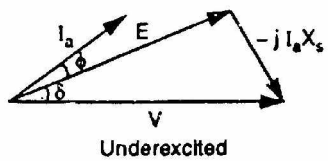

Fig.(10.51)

Now suppose that excitation of the alternator is decreased below normal excitation (under-excitation) while the power input to the prime mover is unchanged. Therefore, the active power output (W or kW) of the alternator will remain unchanged L e., active component of current is unaltered. The underexcited alternator supplies leading current (and hence leading reactive power) to the infinite busbars. It is because when an alternator is underexcited, it must deliver leading current since leading current produces an aiding m.m.f. to increase the underexcitation. Thus an underexcited alternator supplies leading current in addition to the constant active component of current. Therefore, an underexcited alternator will operate at leading power factor. Fig. (10.51) shows the phasor diagram of an underexcited alternator connected to infinite busbars.

Conclusion. An overexcited alternator operates at lagging power factor and supplies lagging reactive power to infinite busbars. On the other hand, an underexcited alternator operates at leading power factor and supplies leading reactive power to the infinite busbars.

(ii) Effect of change in mechanical input

Suppose the alternator is delivering power to infinite busbars under stable conditions so that a certain power angle δ exists between V and E and E leads V. The phasor diagram for this situation is depicted in Fig. (10.52). Now, suppose that excitation of the alternator is kept constant and power input to its prime mover is increased. The increase in power input would tend to accelerate the rotor and £ would move further ahead of V i.e., angle δ increases. Increasing δ results in larger I_a (= E − V/X_s) and lower ϕ as shown in Fig. (10.53). Therefore, the alternator will deliver more active power to the infinite busbars. The angle δ assumes such a value that current I_a has an active power component corresponding to the input: Equilibrium will be reestablished at the speed corresponding to the frequency of the infinite busbars with a larger δ. Fig. (10.53) is drawn for the same d.c. field excitation and, therefore, the same E as Fig. (10.52) but the active power output (= VI_c cos ϕ) is greater than for the condition of Fig. (10.52) and increase in 6 has caused the alternator to deliver additional active power to the busbars. Note that mechanical input to the prime mover cannot change the speed of the alternator because it is fixed by system frequency. Increasing mechanical input increases the speed of the alternator temporarily till such time the power angle δ increases to a value required for stable operation. Once this condition is reached, the alternator continues to run at synchronous speed.

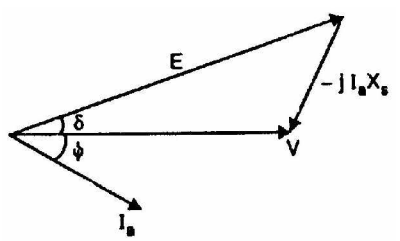

Fig.(10.52)

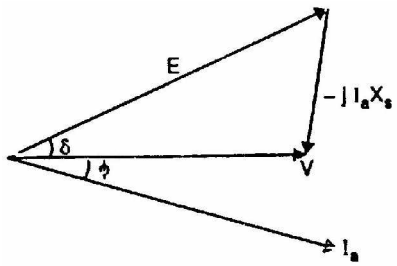

Fig.(10.53)

Conclusion. Increasing the mechanical input power to the prime mover will not change the speed ultimately but will increase the power angle δ. As a result, the change of driving torque controls the output kW and not the kVAR. When this change takes place, the power factor of the machine is practically not affected.

10.32 Power Output Equation

Consider a star-connected cylindrical rotor alternator operating on infinite busbars.

Let V = busbars voltage/phase
E = generated e.m.f./phase

I_a = armature current/phase delivered by the alternator
Z_s = synchronous impedance/phase = $R_a + j X_s$
$\cos\phi$ = lagging p.f. of the alternator
θ = internal angle = $\tan^{-1} X_s/R_a$

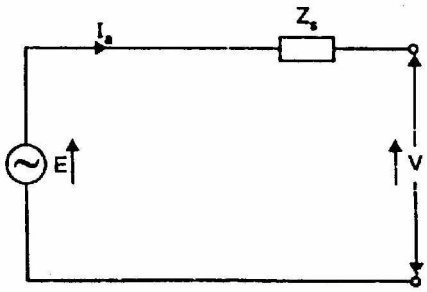

Fig.(10.54)

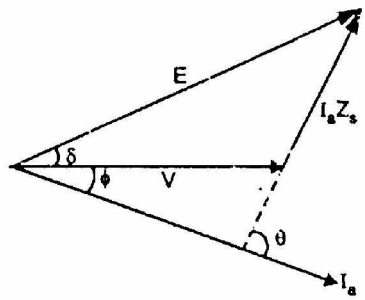

Fig.(10.55)

Fig. (10.54) shows the equivalent circuit for one phase of the alternator whereas Fig. (10.55) shows the phasor diagram. Note that in drawing the phasor diagram, V has been taken as the reference phasor. We shall now derive an expression for the power delivered by the alternator. Referring to Fig. (10.55),

$$I_a = \frac{E\angle\delta - V\angle^0}{Z_s\angle\theta} = \frac{E}{Z_s}\angle(\delta-\theta) - \frac{V}{Z_s}\angle-\theta$$

Power output/phase, P = V × Real part of I_a

$$= V \times \left[\frac{E}{Z_s}\cos(\delta-\theta) - \frac{V}{Z_s}\cos(-\theta)\right]$$

$$= \frac{V}{Z_s}\left[E\cos(\delta-\theta) - V\cos(-\theta)\right]$$

$$= \frac{V^2}{Z_s}\left[\frac{E}{V}\cos(\delta-\theta) - \cos\theta\right]$$

$$\therefore \quad P = \frac{EV}{Z_s}\cos(\delta-\theta) - \frac{V^2}{Z_s}\cos\theta \qquad \text{(i)}$$

Eq. (i) gives the electrical output of the alternator in terms of E, V, Z, θ and load angle δ.

Maximum power output

For given E, V and frequency, the conditions for maximum power output can be obtained by differentiating eq. (i) w.r.t. δ and equating the result to zero i.e.,

$$\frac{dP}{d\delta} = 0$$

or $$\frac{EV}{Z_s}\sin(\theta-\delta)=0$$

or $$\sin(\theta-\delta)=0$$

or $$\theta=\delta$$

For constant busbars voltage V and fixed excitation (i.e., E), the power output of the alternator will be maximum when θ = δ.

$$\therefore \quad P_{max}/\text{phase}=\frac{EV}{Z_s}\cos 0^\circ-\frac{V^2}{Z_s}\cos\theta$$

$$=\frac{EV}{Z_s}-\frac{V^2}{Z_s}\cos\theta \qquad \text{(ii)}$$

Approximate expression. We have seen above that

power output/phase, $$P=\frac{V^2}{Z_s}\left[\frac{E}{V}\cos(\theta-\delta)-\cos\theta\right]$$

$$=\frac{V^2}{Z_s}\left[\frac{E}{V}\cos(\theta-\delta)-\frac{R_a}{Z_s}\right] \qquad \left(\text{n } \cos\theta=\frac{R_a}{Z_s}\right)$$

If $R_a << Z_s$, then θ = 90° and $Z_s = X_s$.

$$\therefore \quad P=\frac{V^2}{Z_s}\left[\frac{E}{V}\cos(90^\circ-\delta)-0\right]$$

or $$P=\frac{EV}{X_s}\sin\delta \text{ per phase} \qquad \text{(iii)}$$

Power output of the alternator will be maximum when δ = 90°.

$$P_{max}/\text{phase}=\frac{EV}{X_s} \qquad \text{(iv)}$$

10.33 Power/Power Angle Characteristic

The power output of an alternator is given by:

Power output/phase, $$P=\frac{EV}{X_s}\sin\delta$$

Total power output $$=\frac{3EV}{X_s}\sin\delta$$

Note that power output varies sinusoidally with power angle δ. Fig. (10.56) shows the power angle characteristic of the alternator. The alternator delivers maximum power when δ = 90°. If δ becomes greater than 90°, the

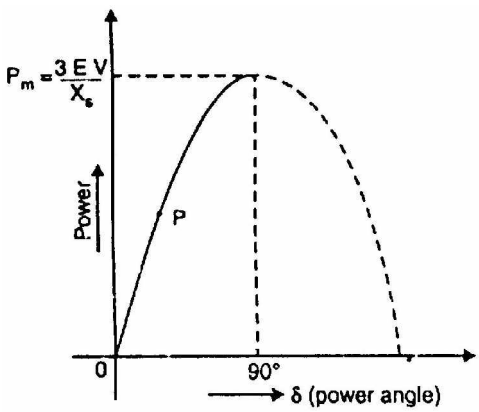

Fig.(10.56)

machine will lose synchronism. The dotted portion of the curve refers to unstable operation, i.e., machine loses synchronism.

Note that stability of the alternator is determined by the power/power angle characteristic. Suppose the operating position of the alternator is represented by point P on the curve. If unsteadiness occurs due to a transient spike of mechanical input, then load angle δ increases by a small amount. The additional electrical output caused by an increase in δ produces a torque which is not balanced by the driving torque once the spike has passed. This torque causes retardation of the rotor and the alternator returns to the operating point P. The torque causing the return of the alternator to the steady-state position is called the synchronizing torque and the power associated with it is known as synchronizing power.

10.34 Hunting

Sometimes an alternator will not operate satisfactorily with others due to hunting. If the driving torque applied to an alternator is pulsating such as that produced by a diesel engine, the alternator rotor may be pulled periodically ahead of or behind its normal position as it rotates. This oscillating action is called hunting. Hunting causes the alternators to shift load from one to another. In some cases, this oscillation of power becomes cumulative and violent enough to cause the alternator to pull out of synchronism.

In salient-pole machines, hunting is reduced by providing damper winding. It consists of short-circuited copper bars embedded in the pole faces as shown in Fig. (10.57). When hunting occurs, there is shifting of armature flux across the pole faces, thereby inducing currents in the damper winding. Since any induced current opposes the action that produces it, the hunting action is opposed by the flow of induced currents. The following points may be noted:

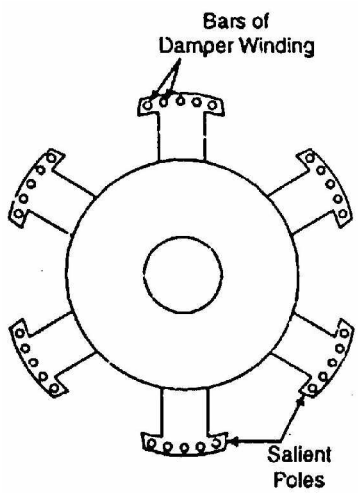

Fig.(10.57)

(i) Hunting generally occurs in alternators driven by engines because the driving torque of engines is not uniform.
(ii) Alternators driven by steam turbines generally do not have a tendency to hunt since the torque applied does not pulsate.
(iii) In cylindrical rotor machines, the damper windings are generally not used. It is because the solid rotor provides considerable damping.

Note. Under normal running condition damper winding does not carry any current because rotor runs at synchronous speed.

Chapter (11)

Synchronous Motors

Introduction

It may be recalled that a d.c. generator can be run as a d.c. motor. In like manner, an alternator may operate as a motor by connecting its armature winding to a 3-phase supply. It is then called a synchronous motor. As the name implies, a synchronous motor runs at synchronous speed (N_s = 120f/P) i.e., in synchronism with the revolving field produced by the 3-phase supply. The speed of rotation is, therefore, tied to the frequency of the source. Since the frequency is fixed, the motor speed stays constant irrespective of the load or voltage of 3-phase supply. However, synchronous motors are not used so much because they run at constant speed (i.e., synchronous speed) but because they possess other unique electrical properties. In this chapter, we shall discuss the working and characteristics of synchronous motors.

11.1 Construction

A synchronous motor is a machine that operates at synchronous speed and converts electrical energy into mechanical energy. It is fundamentally an alternator operated as a motor. Like an alternator, a synchronous motor has the following two parts:

(i) a stator which houses 3-phase armature winding in the slots of the stator core and receives power from a 3-phase supply [See (Fig. (11.1)].

(ii) a rotor that has a set of salient poles excited by direct current to form alternate N and S poles. The exciting coils are connected in series to two slip rings and direct current is fed into the winding from an external exciter mounted on the rotor shaft.

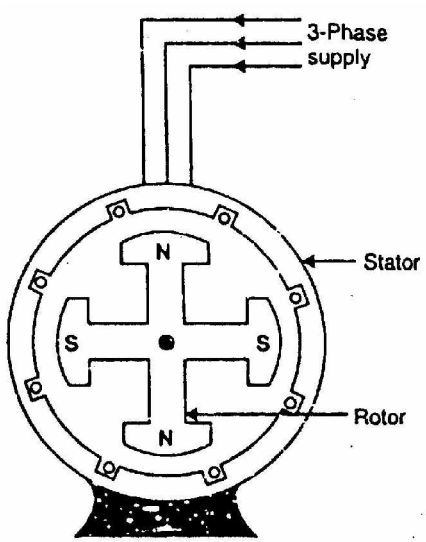

Fig.(11.1)

The stator is wound for the same number of poles as the rotor poles. As in the case of an induction motor, the number of poles determines the synchronous speed of the motor:

Synchronous speed, $N_s = \frac{120f}{P}$

where f = frequency of supply in Hz
P = number of poles

An important drawback of a synchronous motor is that it is not self-starting and auxiliary means have to be used for starting it.

11.2 Some Facts about Synchronous Motor

Some salient features of a synchronous motor are:

(i) A synchronous motor runs at synchronous speed or not at all. Its speed is constant (synchronous speed) at all loads. The only way to change its speed is to alter the supply frequency (N_s = 120 f/P).

(ii) The outstanding characteristic of a synchronous motor is that it can be made to operate over a wide range of power factors (lagging, unity or leading) by adjustment of its field excitation. Therefore, a synchronous motor can be made to carry the mechanical load at constant speed and at the same time improve the power factor of the system.

(iii) Synchronous motors are generally of the salient pole type.

(iv) A synchronous motor is not self-starting and an auxiliary means has to be used for starting it. We use either induction motor principle or a separate starting motor for this purpose. If the latter method is used, the machine must be run up to synchronous speed and synchronized as an alternator.

11.3 Operating Principle

The fact that a synchronous motor has no starting torque can be easily explained.

(i) Consider a 3-phase synchronous motor having two rotor poles N_R and S_R. Then the stator will also be wound for two poles N_S and S_S. The motor has direct voltage applied to the rotor winding and a 3-phase voltage applied to the stator winding. The stator winding produces a rotating field which revolves round the stator at synchronous speed N_s(= 120 f/P). The direct (or zero frequency) current sets up a two-pole field which is stationary so long as the rotor is not turning. Thus, we have a situation in which there exists a pair of revolving armature poles (i.e., $N_S - S_S$) and a pair of stationary rotor poles (i.e., $N_R - S_R$).

(ii) Suppose at any instant, the stator poles are at positions A and B as shown in Fig. (11.2 (i)). It is clear that poles N_S and N_R repel each other and so do the poles S_S and S_R. Therefore, the rotor tends to move in the anti-clockwise direction. After a period of half-cycle (or ½ f = 1/100 second), the polarities of the stator poles are reversed but the polarities of the rotor poles remain the same as shown in Fig. (11.2 (ii)). Now S_S and N_R attract

each other and so do N_S and S_R. Therefore, the rotor tends to move in the clockwise direction. Since the stator poles change their polarities rapidly, they tend to pull the rotor first in one direction and then after a period of half-cycle in the other. Due to high inertia of the rotor, the motor fails to start.

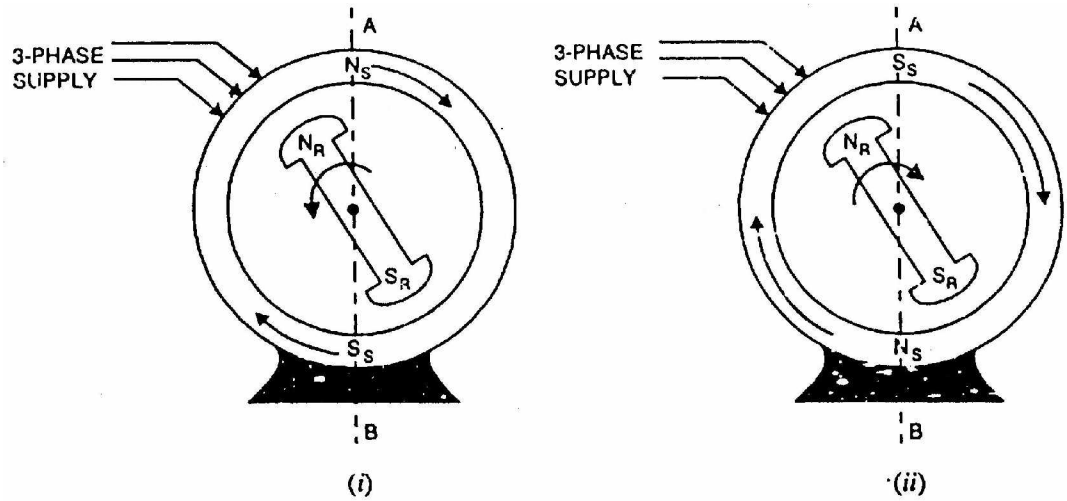

Fig.(10.2)

Hence, a synchronous motor has no self-starting torque i.e., a synchronous motor cannot start by itself.

How to get continuous unidirectional torque? If the rotor poles are rotated by some external means at such a speed that they interchange their positions along with the stator poles, then the rotor will experience a continuous unidirectional torque. This can be understood from the following discussion:

(i) Suppose the stator field is rotating in the clockwise direction and the rotor is also rotated clockwise by some external means at such a speed that the rotor poles interchange their positions along with the stator poles.

(ii) Suppose at any instant the stator and rotor poles are in the position shown in Fig. (11.3 (i)). It is clear that torque on the rotor will be clockwise. After a period of half-cycle, the stator poles reverse their polarities and at the same time rotor poles also interchange their positions as shown in Fig. (11.3 (ii)). The result is that again the torque on the rotor is clockwise. Hence a continuous unidirectional torque acts on the rotor and moves it in the clockwise direction. Under this condition, poles on the rotor always face poles of opposite polarity on the stator and a strong magnetic attraction is set up between them. This mutual attraction locks the rotor and stator together and the rotor is virtually pulled into step with the speed of revolving flux (i.e., synchronous speed).

(iii) If now the external prime mover driving the rotor is removed, the rotor will continue to rotate at synchronous speed in the clockwise direction because the rotor poles are magnetically locked up with the stator poles. It is due to

this magnetic interlocking between stator and rotor poles that a synchronous motor runs at the speed of revolving flux i.e., synchronous speed.

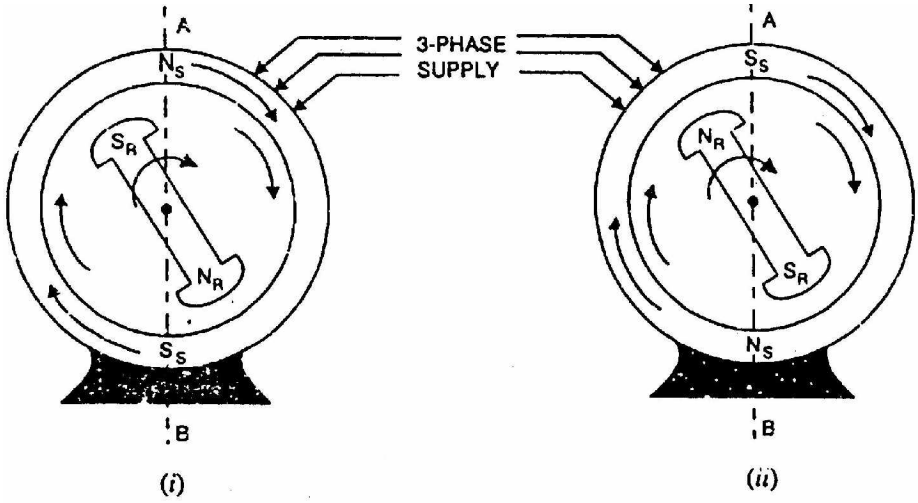

Fig.(11.3)

11.4 Making Synchronous Motor Self-Starting

A synchronous motor cannot start by itself. In order to make the motor self-starting, a squirrel cage winding (also called damper winding) is provided on the rotor. The damper winding consists of copper bars embedded in the pole faces of the salient poles of the rotor as shown in Fig. (11.4). The bars are short-circuited at the ends to form in effect a partial squirrel cage winding. The damper winding serves to start the motor.

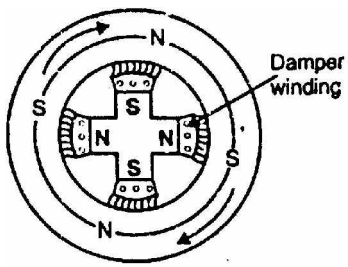

Fig.(11.4)

(i) To start with, 3-phase supply is given to the stator winding while the rotor field winding is left unenergized. The rotating stator field induces currents in the damper or squirrel cage winding and the motor starts as an induction motor.

(ii) As the motor approaches the synchronous speed, the rotor is excited with direct current. Now the resulting poles on the rotor face poles of opposite polarity on the stator and a strong magnetic attraction is set up between them. The rotor poles lock in with the poles of rotating flux. Consequently, the rotor revolves at the same speed as the stator field i.e., at synchronous speed.

(iii) Because the bars of squirrel cage portion of the rotor now rotate at the same speed as the rotating stator field, these bars do not cut any flux and, therefore, have no induced currents in them. Hence squirrel cage portion of the rotor is, in effect, removed from the operation of the motor.

It may be emphasized here that due to magnetic interlocking between the stator and rotor poles, a synchronous motor can only run at synchronous speed. At any other speed, this magnetic interlocking (i.e., rotor poles facing opposite polarity stator poles) ceases and the average torque becomes zero. Consequently, the motor comes to a halt with a severe disturbance on the line.

Note: It is important to excite the rotor with direct current at the right moment. For example, if the d.c. excitation is applied when N-pole of the stator faces N-pole of the rotor, the resulting magnetic repulsion will produce a violent mechanical shock. The motor will immediately slow down and the circuit breakers will trip. In practice, starters for synchronous motors arc designed to detect the precise moment when excitation should be applied.

11.5 Equivalent Circuit

Unlike the induction motor, the synchronous motor is connected to two electrical systems; a d.c. source at the rotor terminals and an a.c. system at the stator terminals.

1. Under normal conditions of synchronous motor operation, no voltage is induced in the rotor by the stator field because the rotor winding is rotating at the same speed as the stator field. Only the impressed direct current is present in the rotor winding and ohmic resistance of this winding is the only opposition to it as shown in Fig. (11.5 (i)).
2. In the stator winding, two effects are to be considered, the effect of stator field on the stator winding and the effect of the rotor field cutting the stator conductors at synchronous speed.

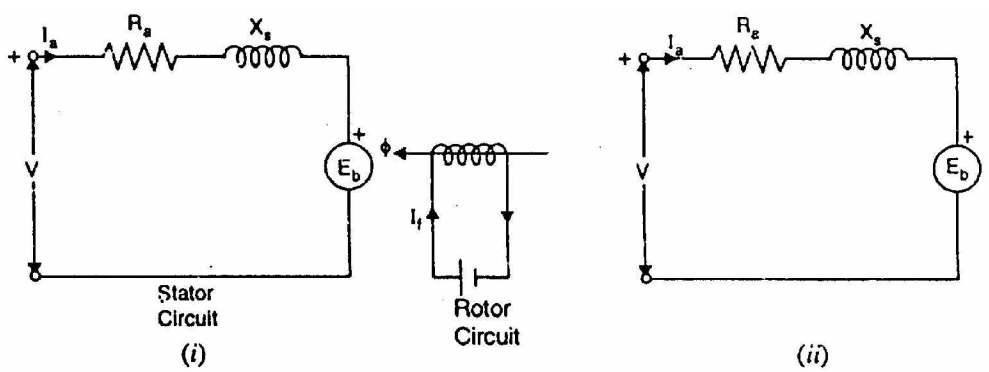

Fig.(11.5)

(i) The effect of stator field on the stator (or armature) conductors is accounted for by including an inductive reactance in the armature winding. This is called synchronous reactance X_s. A resistance R_a must be considered to be in series with this reactance to account for the copper losses in the stator or armature winding as shown in Fig. (11.5 (i)). This

resistance combines with synchronous reactance and gives the synchronous impedance of the machine.

(ii) The second effect is that a voltage is generated in the stator winding by the synchronously-revolving field of the rotor as shown in Fig. (11.5 (i)). This generated e.m.f. E_B is known as back e.m.f. and opposes the stator voltage V. The magnitude of E_b depends upon rotor speed and rotor flux ϕ per pole. Since rotor speed is constant; the value of E_b depends upon the rotor flux per pole i.e. exciting rotor current I_f.

Fig. (11.5 (i)) shows the schematic diagram for one phase of a star-connected synchronous motor while Fig. (11.5 (ii)) shows its equivalent circuit. Referring to the equivalent circuit in Fig. (11.5 (ii)).

Net voltage/phase in stator winding is

$$E_r = V - E_b \qquad \text{phasor difference}$$

Armature current/phase, $I_a = \dfrac{E_r}{Z_s}$

where $\quad Z_s = \sqrt{R_a^2 + X_s^2}$

This equivalent circuit helps considerably in understanding the operation of a synchronous motor.

A synchronous motor is said to be normally excited if the field excitation is such that $E_b = V$. If the field excitation is such that $E_b < V$, the motor is said to be under-excited. The motor is said to be over-excited if the field excitation is such that $E_b > V$. As we shall see, for both normal and under excitation, the motor has lagging power factor. However, for over-excitation, the motor has leading power factor.

Note: In a synchronous motor, the value of X_s is 10 to 100 times greater than R_a. Consequently, we can neglect R_a unless we are interested in efficiency or heating effects.

11.6 Motor on Load

In d.c. motors and induction motors, an addition of load causes the motor speed to decrease. The decrease in speed reduces the counter e.m.f. enough so that additional current is drawn from the source to carry the increased load at a reduced speed. This action cannot take place in a synchronous motor because it runs at a constant speed (i.e., synchronous speed) at all loads.

What happens when we apply mechanical load to a synchronous motor? The rotor poles fall slightly behind the stator poles while continuing to run at

synchronous speed. The angular displacement between stator and rotor poles (called torque angle α) causes the phase of back e.m.f. E_b to change w.r.t. supply voltage V. This increases the net e.m.f. E_r in the stator winding. Consequently, stator current I_a (= E_r/Z_s) increases to carry the load.

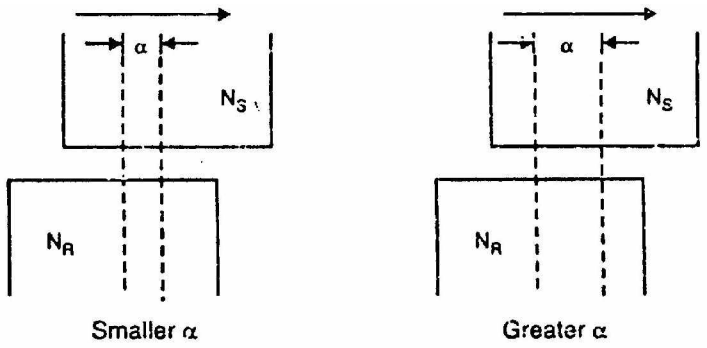

Fig.(11.6)

The following points may be noted in synchronous motor operation:

(i) A synchronous motor runs at synchronous speed at all loads. It meets the increased load not by a decrease in speed but by the relative shift between stator and rotor poles i.e., by the adjustment of torque angle α.

(ii) If the load on the motor increases, the torque angle a also increases (i.e., rotor poles lag behind the stator poles by a greater angle) but the motor continues to run at synchronous speed. The increase in torque angle α causes a greater phase shift of back e.m.f. E_b w.r.t. supply voltage V. This increases the net voltage E_r in the stator winding. Consequently, armature current I_a (= E_r/Z_s) increases to meet the load demand.

(iii) If the load on the motor decreases, the torque angle α also decreases. This causes a smaller phase shift of E_b w.r.t. V. Consequently, the net voltage E_r in the stator winding decreases and so does the armature current I_a (= E_r/Z_s).

11.7 Pull-Out Torque

There is a limit to the mechanical load that can be applied to a synchronous motor. As the load increases, the torque angle α also increases so that a stage is reached when the rotor is pulled out of synchronism and the motor comes to a standstill. This load torque at which the motor pulls out of synchronism is called pull—out or breakdown torque. Its value varies from 1.5 to 3.5 times the full—load torque.

When a synchronous motor pulls out of synchronism, there is a major disturbance on the line and the circuit breakers immediately trip. This protects the motor because both squirrel cage and stator winding heat up rapidly when the machine ceases to run at synchronous speed.

11.8 Motor Phasor Diagram

Consider an under-excited ^tar-connected synchronous motor (E_b < V) supplied with fixed excitation i.e., back e.m.f. E_b is constant-

Let V = supply voltage/phase

E_b = back e.m.f./phase

Z_s = synchronous impedance/phase

(i) Motor on no load

When the motor is on no load, the torque angle α is small as shown in Fig. (11.7 (i)). Consequently, back e.m.f. E_b lags behind the supply voltage V by a small angle δ as shown in the phasor diagram in Fig. (11.7 (iii)). The net voltage/phase in the stator winding, is E_r.

Armature current/phase, $I_a = E_r/Z_s$

The armature current I_a lags behind E_r by $\theta = \tan^{-1} X_s/R_a$. Since $X_s >> R_a$, I_a lags E_r by nearly 90°. The phase angle between V and I_a is ϕ so that motor power factor is cos ϕ.

Input power/phase = V I_a cos ϕ

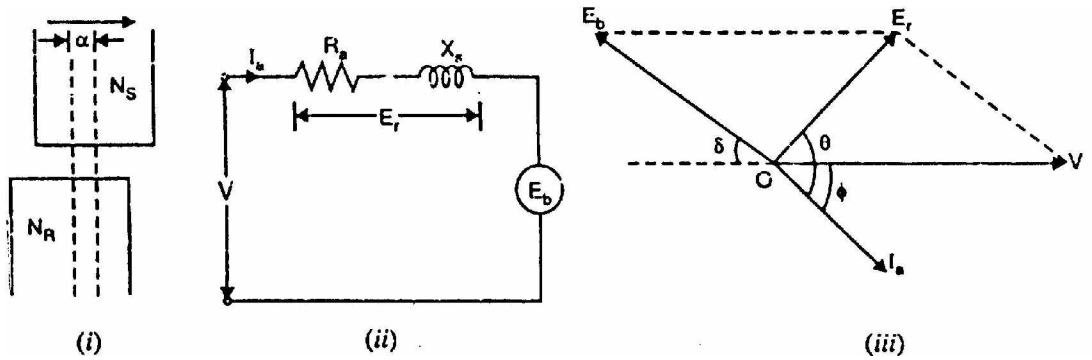

Fig.(11.7)

Thus at no load, the motor takes a small power VI_a cos ϕ/phase from the supply to meet the no-load losses while it continues to run at synchronous speed.

(ii) Motor on load

When load is applied to the motor, the torque angle a increases as shown in Fig. (11.8 (i)). This causes E_b (its magnitude is constant as excitation is fixed) to lag behind V by a greater angle as shown in the phasor diagram in Fig. (11.8 (ii)). The net voltage/phase E_r in the stator winding increases. Consequently, the motor draws more armature current I_a (=E_r/Z_s) to meet the applied load.

Again I_a lags E_r by about 90° since $X_s >> R_a$. The power factor of the motor is cos ϕ.

Input power/phase, $P_i = V I_a \cos \phi$

Mechanical power developed by motor/phase

$$P_m = E_b \times I_a \times \text{cosine of angle between } E_b \text{ and } I_a$$

$$= E_b I_a \cos(\delta - \phi)$$

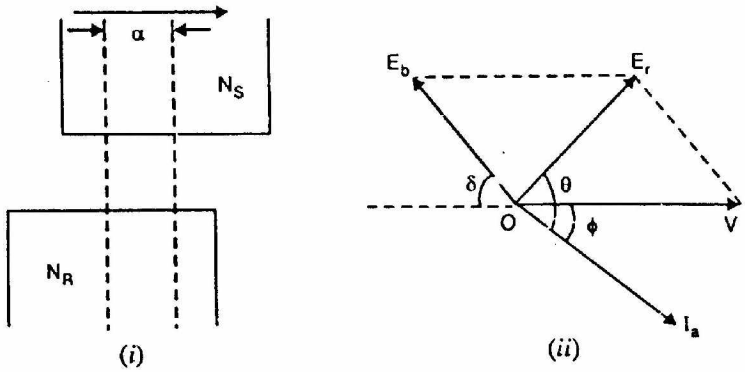

Fig.(11.8)

11.9 Effect of Changing Field Excitation at Constant Load

In a d.c. motor, the armature current I_a is determined by dividing the difference between V and E_b by the armature resistance R_a. Similarly, in a synchronous motor, the stator current (I_a) is determined by dividing voltage-phasor resultant (E_r) between V and E_b by the synchronous impedance Z_s.

One of the most important features of a synchronous motor is that by changing the field excitation, it can be made to operate from lagging to leading power factor. Consider a synchronous motor having a fixed supply voltage and driving a constant mechanical load. Since the mechanical load as well as the speed is constant, the power input to the motor (=3 $VI_a \cos \phi$) is also constant. This means that the in-phase component $I_a \cos \phi$ drawn from the supply will remain constant. If the field excitation is changed, back e.m.f E_b also changes. This results in the change of phase position of I_a w.r.t. V and hence the power factor $\cos \phi$ of the motor changes. Fig. (11.9) shows the phasor diagram of the synchronous motor for different values of field excitation. Note that extremities of current phasor I_a lie on the straight line AB.

(i) Under excitation

The motor is said to be under-excited if the field excitation is such that $E_b < V$. Under such conditions, the current I_a lags behind V so that motor power factor is lagging as shown in Fig. (11.9 (i)). This can be easily explained. Since $E_b < V$, the net voltage E_r is decreased and turns clockwise. As angle θ (= 90°) between E_r and I_a is constant, therefore, phasor I_a also turns clockwise i.e., current I_a lags behind the supply voltage. Consequently, the motor has a lagging power factor.

(ii) Normal excitation

The motor is said to be normally excited if the field excitation is such that E_b = V. This is shown in Fig. (11.9 (ii)). Note that the effect of increasing excitation (i.e., increasing E_b) is to turn the phasor E_r and hence I_a in the anti-clockwise direction i.e., I_a phasor has come closer to phasor V. Therefore, p.f. increases though still lagging. Since input power (=3 V I_a cos ϕ) is unchanged, the stator current I_a must decrease with increase in p.f.

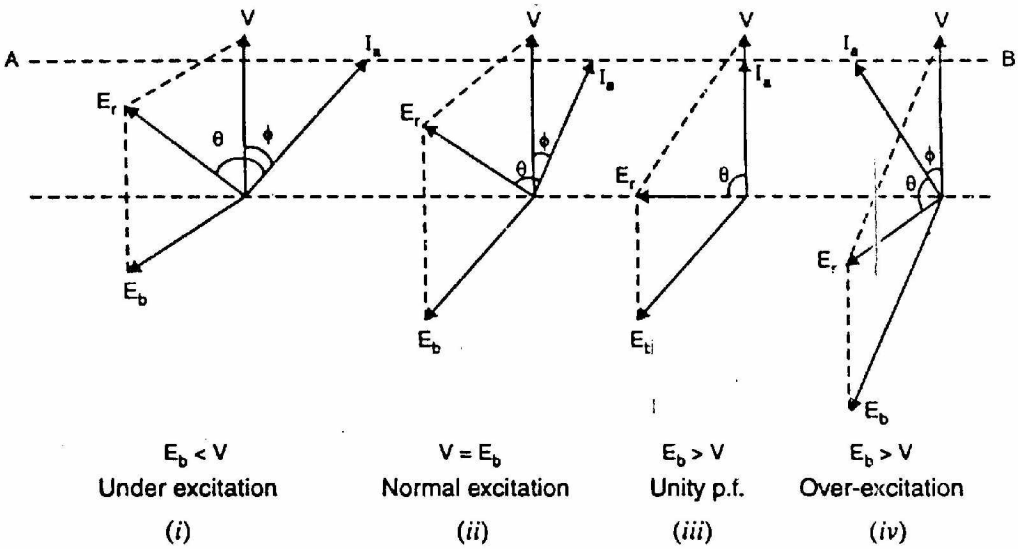

Fig.(11.9)

Suppose the field excitation is increased until the current I_a is in phase with the applied voltage V, making the p.f. of the synchronous motor unity [See Fig. (11.9 (iii))]. For a given load, at unity p.f. the resultant E_r and, therefore, I_a are minimum.

(iii) Over excitation

The motor is said to be overexcited if the field excitation is such that E_b > V. Under-such conditions, current I_a leads V and the motor power factor is leading as shown in Fig. (11.9 (iv)). Note that E_r and hence I_a further turn anti-clockwise from the normal excitation position. Consequently, I_a leads V.

From the above discussion, it is concluded that if the synchronous motor is under-excited, it has a lagging power factor. As the excitation is increased, the power factor improves till it becomes unity at normal excitation. Under such conditions, the current drawn from the supply is minimum. If the excitation is further increased (i.e., over excitation), the motor power factor becomes leading.

Note. The armature current (I_a) is minimum at unity p.f and increases as the power factor becomes poor, either leading or lagging.

11.10 Phasor Diagrams With Different Excitations

Fig. (11.10) shows the phasor diagrams for different field excitations at constant load. Fig. (11.10 (i)) shows the phasor diagram for normal excitation (E_b = V), whereas Fig. (11.10 (ii)) shows the phasor diagram for under-excitation. In both cases, the motor has lagging power factor.

Fig. (11.10 (iii)) shows the phasor diagram when field excitation is adjusted for unity p.f. operation. Under this condition, the resultant voltage E_r and, therefore, the stator current I_a are minimum. When the motor is overexcited, it has leading power factor as shown in Fig. (11.10 (iv)). The following points may be remembered:

(i) For a given load, the power factor is governed by the field excitation; a weak field produces the lagging armature current and a strong field produces a leading armature current.

(ii) The armature current (I_a) is minimum at unity p.f and increases as the p.f. becomes less either leading or lagging.

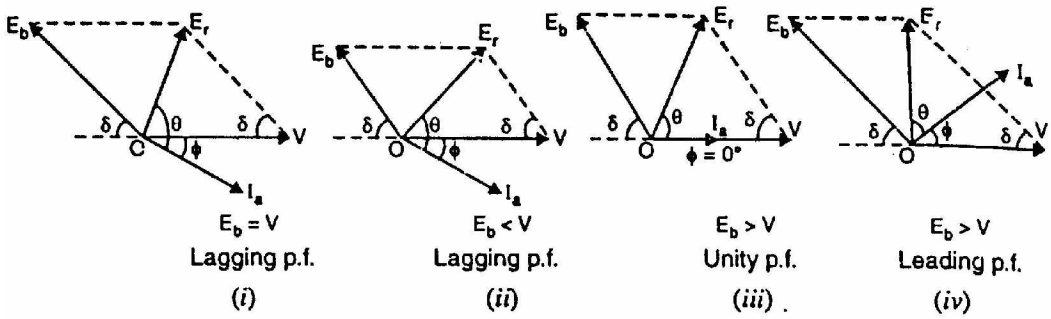

Fig.(11.10)

11.11 Power Relations

Consider an under-excited star-connected synchronous motor driving a mechanical load. Fig. (11.11 (i)) shows the equivalent circuit for one phase, while Fig. (11.11 (ii)) shows the phasor diagram.

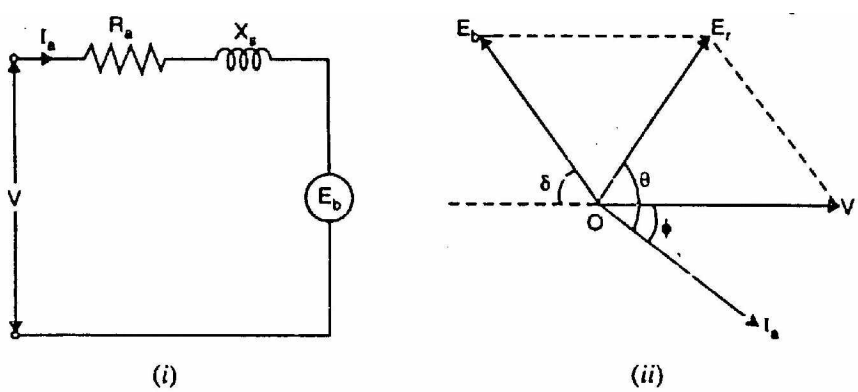

Fig.(11.11)

(i) Input power/phase, $P_i = V\ I_a \cos\phi$

(ii) Mechanical power developed by the motor/phase,

$$P_m = E_b \times I_a \times \text{cosine of angle between } E_b \text{ and } I_a$$

$$= E_b\ I_a \cos(\delta - \phi)$$

(iii) Armature Cu loss/phase = $I_a^2 R_a = P_i - P_m$

(iv) Output power/phasor, $P_{out} = P_m$ – Iron, friction and excitation loss.

Fig. (11.12) shows the power flow diagram of the synchronous motor.

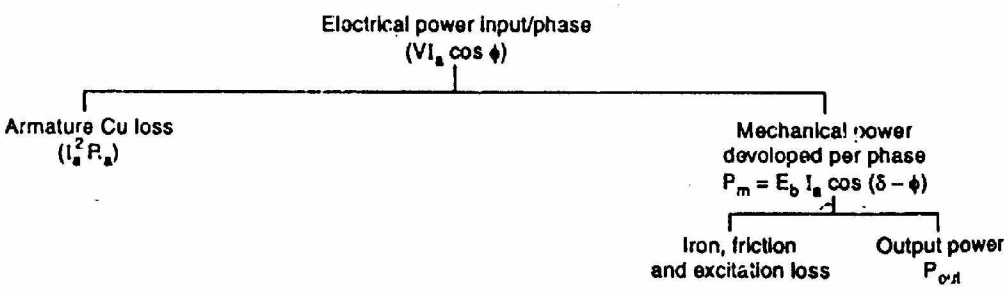

Fig.(11.12)

11.12 Motor Torque

$$\text{Gross torque, } T_g = 9.55\frac{P_m}{N_s}\ \text{N - m}$$

where P_m = Gross motor output in watts = $E_b\ I_a \cos(\delta - \phi)$
N_s = Synchronous speed in r.p.m.

$$\text{Shaft torque, } T_{sh} = 9.55\frac{P_{out}}{N_s}\ \text{N - m}$$

It may be seen that torque is directly proportional to the mechanical power because rotor speed (i.e., N_s) is fixed.

11.13 Mechanical Power Developed By Motor

(Armature resistance neglected)

Fig. (11.13) shows the phasor diagram of an under-excited synchronous motor driving a mechanical load. Since armature resistance R_a is assumed zero. $\tan\theta = X_s/R_a = \infty$ and hence $\theta = 90°$.

Input power/phase = $V\ I_a \cos\phi$

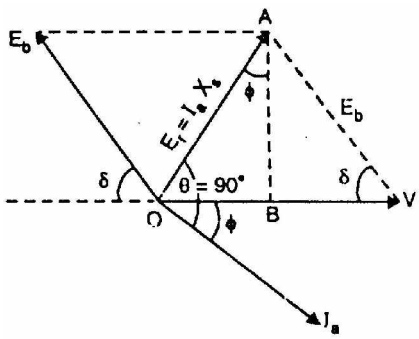

Fig.(11.13)

Since R_a is assumed zero, stator Cu loss $(I_a^2 R_a)$ will be zero. Hence input power is equal to the mechanical power P_m developed by the motor.

Mech. power developed/ phase, $P_m = V I_a \cos\phi$ (i)

Referring to the phasor diagram in Fig. (11.13),

$$AB = E_r \cos\phi = I_a X_s \cos\phi$$

Also $$AB = E_b \sin\delta$$

$$\therefore \quad E_b \sin\delta = I_a X_s \cos\phi$$

or $$I_a \cos\phi = \frac{E_b \sin\delta}{X_s}$$

Substituting the value of $I_a \cos\phi$ in exp. (i) above,

$$P_m = \frac{V E_b}{X_s} \quad \text{per phase}$$

$$= \frac{V E_b}{X_s} \quad \text{for 3-phase}$$

It is clear from the above relation that mechanical power increases with torque angle (in electrical degrees) and its maximum value is reached when $\delta = 90°$ (electrical).

$$P_{max} = \frac{V E_b}{X_s} \quad \text{per phase}$$

Under this condition, the poles of the rotor will be mid-way between N and S poles of the stator.

11.14 Power Factor of Synchronous Motors

In an induction motor, only one winding (i.e., stator winding) produces the necessary flux in the machine. The stator winding must draw reactive power from the supply to set up the flux. Consequently, induction motor must operate at lagging power factor.

But in a synchronous motor, there are two possible sources of excitation; alternating current in the stator or direct current in the rotor. The required flux may be produced either by stator or rotor or both.

(i) If the rotor exciting current is of such magnitude that it produces all the required flux, then no magnetizing current or reactive power is needed in the stator. As a result, the motor will operate at unity power factor.

(ii) If the rotor exciting current is less (i.e., motor is under-excited), the deficit in flux is made up by the stator. Consequently, the motor draws reactive power to provide for the remaining flux. Hence motor will operate at a lagging power factor.

(iii) If the rotor exciting current is greater (i.e., motor is over-excited), the excess flux must be counterbalanced in the stator. Now the stator, instead of absorbing reactive power, actually delivers reactive power to the 3-phase line. The motor then behaves like a source of reactive power, as if it were a capacitor. In other words, the motor operates at a leading power factor.

To sum up, a synchronous motor absorbs reactive power when it is under-excited and delivers reactive power to source when it is over-excited.

11.15 Synchronous Condenser

A synchronous motor takes a leading current when over-excited and, therefore, behaves as a capacitor.

An over-excited synchronous motor running on no-load in known as synchronous condenser.

When such a machine is connected in parallel with induction motors or other devices that operate at low lagging power factor, the leading kVAR supplied by the synchronous condenser partly neutralizes the lagging reactive kVAR of the loads. Consequently, the power factor of the system is improved.

Fig. (11.14) shows the power factor improvement by synchronous condenser method. The $3-\phi$ load takes current I_L at low lagging power factor $\cos\phi_L$. The synchronous condenser takes a current I_m which leads the voltage by an angle ϕ_m. The resultant current I is the vector sum of I_m and I_L and lags behind the voltage by an angle ϕ. It is clear that ϕ is less than ϕ_L so that $\cos\phi$ is greater than $\cos\phi_L$. Thus the power factor is increased from $\cos\phi_L$ to $\cos\phi$. Synchronous condensers are generally used at major bulk supply substations for power factor improvement.

Advantages

(i) By varying the field excitation, the magnitude of current drawn by the motor can be changed by any amount. This helps in achieving stepless control of power factor.

(ii) The motor windings have high thermal stability to short circuit currents.

(iii) The faults can be removed easily.

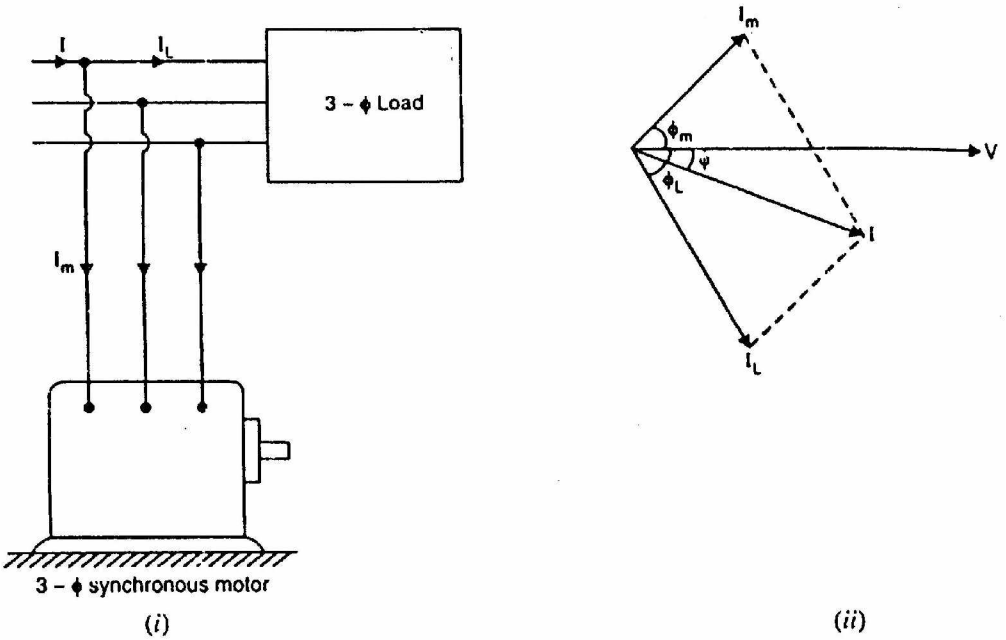

Fig.(11.14)

Disadvantages

(i) There are considerable losses in the motor.
(ii) The maintenance cost is high.
(iii) It produces noise.
(iv) Except in sizes above 500 RVA, the cost is greater than that of static capacitors of the same rating.
(v) As a synchronous motor has no self-starting torque, then-fore, an auxiliary equipment has to be provided for this purpose.

11.16 Applications of Synchronous Motors

(i) Synchronous motors are particularly attractive for low speeds (< 300 r.p.m.) because the power factor can always be adjusted to unity and efficiency is high.
(ii) Overexcited synchronous motors can be used to improve the power factor of a plant while carrying their rated loads.
(iii) They are used to improve the voltage regulation of transmission lines.
(iv) High-power electronic converters generating very low frequencies enable us to run synchronous motors at ultra-low speeds. Thus huge motors in the 10 MW range drive crushers, rotary kilns and variable-speed ball mills.

11.17 Comparison of Synchronous and Induction Motors

S. No.	Particular	Synchronous Motor	3-phase Induction Motor
1.	Speed	Remains constant (i.e., N_s) from no-load to full-load.	Decreases with load.
2.	Power factor	Can be made to operate from lagging to leading power factor.	Operates at lagging power factor.
3.	Excitation	Requires d.c. excitation at the rotor.	No excitation for the rotor.
4.	Economy	Economical fcr speeds below 300 r.p.m.	Economical for speeds above 600 r.p.m.
5.	Self-starting	No self-starting torque. Auxiliary means have to be provided for starting.	Self-starting
6.	Construction	Complicated	Simple
7.	Starting torque	More	less